MACHINERY.

June, 1904.

COMMENTS ON DRIVES FOR HIGH-SPEED CUTTING TOOLS.

C. E. COOLIDGE.

C. E. Coolidge.

What has been considered in the past as marvelous in the performance of high-duty cutting tools may now be considered quite tame when compared with the proven results of air-hardening cutting tools. The metallurgist has proven to us, and a great many machine tool builders have satisfied themselves by practical experiment, that the high-speed cutting steels are at our service, but they must be properly shod if they are to be used to the best advantage.

Some few concerns who have experimented with the high-speed steels and who anticipated much have signally failed to their utter discouragement through lack of a proper analysis of the conditions which accompany the use of the high-speed cutting steels. It takes but a moment's reflection to convince one of the absurdity of trying to get as effective a fire from a six-inch as from a thirteen-inch gun, even though the same explosive charge is used in both.

Some view this unusual commotion about the new cutting steels as being somewhat fanatical or a fad which will rage for a time and then die a natural death as many others have done. True, this is not the first high-duty cutting steel which has been advanced with enormous claims of efficiency. Mushet steel has been on the market for several years and the great things predicted for it we must admit did not fully meet everybody's expectations. The chief reason for this was its far too limited use in a great many cases, on account of its being expensive, difficult to forge, grind, and to get a satisfactorily finished surface with it, and the failure of the machine to stand up to the chip it could take. Then again, when Mushet steel was introduced competition among machine tool builders for increased product from their machines did not begin to compare with that which now exists with firms which more than ever are on an intensely manufacturing basis. Manufacturing plants of any considerable size using metal cutting tools are bidding nowadays for specially designed machinery of the simplest form to augment the output of a single product and not for comparatively complicated combination tools, designed for many operations on many pieces and which save considerable room and first cost of installation but are of necessity inconvenient, and unsuitable for high-duty service.

The complaint which has been made by some that the new high-speed cutting steels are unfit for finishing surfaces cannot be consistently sustained. The modernly designed manufacturing grinder has unquestionably proven to be the proper tool for finishing surfaces from the rough; and undoubtedly, and beyond peradventure, the grinder is the natural running mate for the high-duty turning lathe and planers; and it seems probable that, instead of the grinder being a rarity and a luxury in shops as a sort of tool room machine, it will be as much in evidence for manufacturing purposes as the more commouly known machine tools of the present, or more so.

The innovations of the day in machine tool evolution are in most remarkable harmony and synchronism. The electric motor, which is fast developing for economy and convenience into the approaching indispensable, and independent machine drive, demands a high speed for maximum efficiency of the motor; and what do we find contemporaneously developed but the high-speed cutting steels, the practicable commercial grinder, and the comparatively high-speed mono-stroke milling machine to supersede the comparatively slow multi-stroke planer? Unquestionably, there never has been in the whole history of the machine tool business such an opportunity for the enterprising capitalist, the engineer, and the designer to invest their money, brains, and skill in a type of machine tools that will be as different from the present type as the nineteenth century lathe is from the simple and crude Egyptian lathe of tradition.

The development of the cutting or producing end of the machine appears to be further advanced than the driving end. The direct motor drive without inter-connecting belts, chains, and gears is undoubtedly the simplest, most convenient, and most effective. The motor which is most desired has not been designed but it should be a comparatively slow-speed motor having high efficiency, whose speeds vary by infinitesimal steps between its minimum and maximum limits, fully as simple as the "commutatorless" type and with far higher pressures than is now used. In the meantime, during the process of development, we shall have to be content with the usual compounding elements between the motor and the driving spindle; but these compounding elements, in order to keep up with the procession, will naturally undergo revolutionary changes in design to meet the demands of cutting tools for more power.

The silent chain drive and the high-speed motor are mutual helpmates; geared variable speed devices and single speed induction motors are well wedded; but cone pulleys are practically just beginning to receive that examination and attention which can fit them for the service of higher speeds.

In the case of a turning lathe, as would naturally be expected, we are very much limited in the range of the sizes of pieces that can be turned—if we maintain an efficient range of speeds and sufficient diameters and widths of pulleys for surface speeds of belts—unless we use an abnormally ponderous cone pulley, which is entirely out of the question. To make this point clear, it may be well to analyze a specific case. We will assume that the lathe is designed with a four-stepped cone and with "front gears" (the speed ratios of front gears figure the same as back gears but their thrust at the front box is opposite in direction to that of the back gears and to the lifting effect of the tool, as it properly should be), two countershaft speeds, and for cutting 30-point carbon steel at a speed of 100 feet per minute with a chip of 5-16 by 3-32 inch cross section. It is furthermore assumed that the work and cutting tool are rigidly supported and that the cutting tool has the proper amount of rake for least resistance and a fair amount of endurance.

Calculation of Cutting Force of Tool and Speed of Belt.

In order to make absolute computations of the required diameters, we should have reliable data on the amount of cutting force at the cutting edge of the tool when cutting the various metals at high speeds, reliable data for the best efficiency of the redesigned machine, and the approximate distance between the centers of the driving spindle and countershaft. Several experiments were made by Hartig and subsequently by others on the horse power required at the cutting edge of a tool when cutting various metals at slow speeds with the ordinary tempered steels. The horse power was determined

---

C. E. COOLIDGE, the author of this article, was born April 6, 1870, at Willimantic, Conn. After leaving the Hartford High School he served an apprenticeship of four years at Pratt & Whitney Co., and worked for the same firm as a journeyman machinist for one year. He graduated with the class of '95 from Yale Scientific School, and served three years as draftsman with the Pope Tube Co. and the Eddy Electric Mfg. Co. Then he held successively the positions of Instructor, Adj. Professor, and Assistant Professor in the Worcester Polytechnic Institute, the Georgia School of Technology, and the Sibley College respectively. Mr. Coolidge is the author of several articles published in MACHINERY, and other technical journals.

by multiplying the weight of chips turned off per hour by a constant whose value varied with the degree of hardness of the metal cut and the conditions of the cutting edge of the tool. The average of the several constants for about 30-point carbon steel seems to be about .035.

Hartig's expression is given in the formula

$$H.\ P. = c\ W = .035 \times \pi \times D \times n \times d \times t \times .28 \times 60 \quad (1)$$

and the usual expression for horse power is given in the form,

$$H.\ P. = \frac{F\ S}{33000} = \frac{F \times \pi \times D \times n}{33000 \times 12} \quad (2), \text{ in which}$$

$H.\ P.$ = horse power absorbed at the cutting edge of tool.
c = constant .035.
W = weight of chips per hour.
D = mean diameter of the area turned off per hour.
n = revolutions per minute.
d = depth of chip.
t = thickness of chip.
.28 = assumed average weight per cubic inch of 30-point carbon steel.
F = force at cutting edge of tool.
S = distance through which force F acts.

Equating (1.) and (2.),

$$F = .035 \times .28 \times 60 \times 33000 \times 12 \times d \times t = 232900dt.$$

Since the chip assumed to be cut is 5-16 by 3-32 inch cross section, then the force at the cutting tool is

$$F = 232900 \times 5\text{-}16 \times 3\text{-}32 \text{ inch} = 6825 \text{ pounds.}$$

If the cutting speed is 100 feet per minute then the work at tool

$$W = 6825 \times 100 = 682500 \text{ foot pounds.}$$

If the efficiency of the machine is assumed at 85 per cent., then the effective work of the belt must be

$$W = \frac{682500 \times 100}{85} = 803000 \text{ foot pounds.}$$

We will assume that a 5-inch double belt is the practical limit for the belt which can be conveniently used on the machine, and that the effective pull is 70 pounds per inch width when wrapped around a cast iron pulley with a contact surface of 180 degrees. The total effective pull is then

$$5 \times 70 = 350 \text{ pounds pressure.}$$

Since our belt must deliver 803000 foot pounds per minute, its velocity will be

$$V = \frac{803000}{350} = 2295 \text{ feet per minute, which must be proportional to the diameters of the cone pulleys and the countershaft speeds which are obtained as follows:}$$

It is customary to consider speeds in a series of geometrical progression if the most efficient and convenient range of speeds is desired. The constant multiplier will then be

$$r = \left(\frac{l}{a}\right)^{\frac{1}{n_1 - 1}}, \text{ in which} \quad (3)$$

r = constant multiplier.
l = maximum R. P. M. of spindle.
a = minimum R. P. M. of spindle.
n_1 = number of speeds.

Let it be assumed that the lathe is designed to turn sizes from 1 to 6 inches. The corresponding maximum and minimum revolutions per minute for the cutting speed 100 feet per minute are 382 and 62 respectively. Then from (3)

$$r = \left(\frac{382}{62}\right)^{\frac{1}{15}}$$

$$\log r = \frac{1}{15} \log 6.16$$

$$r = 1.128$$

The whole series of speeds in geometrical progression and the diameters of stock, which will approximately correspond, if a cutting speed of 100 feet per minute be used, is given in the following table:

SPEEDS IN R.P.M.	DIAMETER OF STOCK			SPEEDS IN R.P.M.	DIAMETER OF STOCK		
382	1	CONE PULLEY SPEEDS		145	2⅜	CONE PULLEY SPEEDS	
338	1⅛			128	3		
300	1¼		FAST COUNTERSHAFT SPEED	113	3⅜		SLOW COUNTERSHAFT SPEED
265	1⅜			101	3¾		
235	1⅝	BACK GEAR SPEEDS		89	4 5/16	BACK GEAR SPEEDS	
208	1 13/16			78	4⅞		
184	2 1/16			69	5½		
163	2⅜			62	6		

Industrial Press, N.Y.

In the sketch assume that the countershaft and spindle cone pulleys are the same size, as is usually the case for the engine lathe. Let

D_1 = diameter of largest step.
D_4 = diameter of smallest step.
n' = slowest speed of countershaft.
N_1 = fastest speed of spindle to correspond with slowest countershaft speed.
N_4 = slowest speed of spindle without back gears to correspond with slowest countershaft speed.

$$\text{Let } \frac{D_1}{D_4} = r \quad (4)$$

$$\frac{D_4}{D_1} = \frac{1}{r} \quad (5)$$

Then

$$n' \times r = N_1 \quad (6)$$

$$n' \times \frac{1}{r} = N_4 \quad (7)$$

Combining (6) and (7),

$$n' = \sqrt{N_1 \times N_4} \quad (8)$$

Substituting in (8) the proper speeds taken from the table,

$$n' = \sqrt{145 \times 101} = 121$$

From (6)

$$r = \frac{N_1}{n'} = \frac{145}{121} = 1.199$$

$$D_4 = \frac{V}{\pi\ n'} \quad (9)$$

Substituting in (9) the value of V and n',

$$D_4 = \frac{2295 \times 12}{3.14 \times 121} = 72\frac{1}{4} \text{ inches}$$

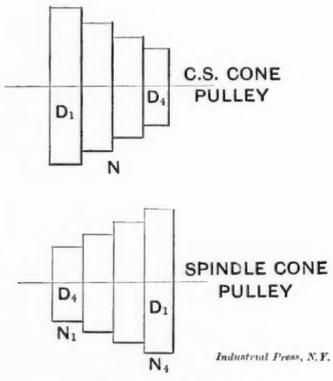

Diagram of Cones.

From (4)

$$D_1 = r \times D_4 \quad (10)$$

Substituting in (10) the value of r and D_4

$$D_1 = 1\ 199 \times 72\frac{1}{4} = 86\frac{1}{2} \text{ inches}$$

The front gear ratio from spindle cone speed to driving spindle speed will be $\frac{145}{89} = 1.629$.

Since the values of the constants used in computing the force at the cutting tool were taken from experiments made with slow cutting speeds and would be considered low in view of the fact, noted by some, that the work at the tool for high speeds increases in far greater proportion than the increased cutting speeds; and since the assumed 70 pounds per inch width for effective pull at the belt is quite liberal, it is clear that the pulleys are practically at a minimum size under the conditions assumed. It is therefore convincingly apparent that

for the ordinary back geared head, belts can be of no avail for high-speed cutting except for extremely limited ranges of diameters of stock.

If the diameters of the pulleys are reduced by speeding up the belts and gearing down the spindle, nothing is availed in most cases but an added and useless expense, since every compounding element is a loan for a mortgage whose interest rates sometimes increase pretty nearly in a geometrical progression.

"Figures speak for themselves" is enough said after an inspection of the above results.

* * *

Perhaps one of the best indications of the advance of engineering knowledge during the past seventy-five years is the general substitution of rational formulas for the old rules-of-thumb and empirical prescriptions laid down for the guidance of early engineers. An example of these crude rules is given by Mr. Edwin F. Smith in a paper "Some Early Engineering Works in Pennsylvania," read before the Engineers' Club of Philadelphia. It has reference to the length of rails and was formulated in the days when cast iron and wrought rails were on about an even footing; it was designated as "Rule for the Best Length of Rails of Railroads" and reads as follows: "The price of a ton of iron delivered on the railroad must be known, and also the price of the chair, stones and setting one support. Then divide the price of a ton of iron by the price of one support, both being in dollars; square the quotient and multiply it into the breadth of the rail in inches, and this product by one-twentieth part of the weight of the wagon in pounds, and extract the cube root of the product; divide 700 by the cube root found, and the result will be the length of the rail in feet." The rule was supposed to apply to cast iron rails only.

* * *

The so-called fireproof paints used to some extent on interiors of shops are chiefly valuable for their lighting effect, being white. Whitewash is practically as effective in preventing the spread of small fires and is equally as effective in lighting gloomy interiors—besides it is much cheaper. Where something better in appearance than ordinary whitewash is wanted the following receipt is said to make a glossy and durable covering for wood and brick walls: For each five gallons of water a pound of rice is boiled soft and thoroughly triturated by being rubbed through a fine sieve. The water should be boiling hot when the rice water is added, and at the same time one peck of lime and one pound of salt are thoroughly mixed through, and boiled up. To get the best results this whitewash should be applied hot.

EARLY STEAM ENGINES.

SOME OF THE EARLIEST WORK OF INVENTORS.

A. R. BELL.

Among the many inventions of man to administer to the necessities and to augment the luxuries of life by mechanical means, none have proved more valuable than the steam engine. Many discoveries have involved more intellectual power as well as more varied ingenuity in construction, but estimating the importance of causes by their consequences the steam engine must stand as one of the proudest monuments of mental conception.

It is not only as a prime mover that the importance of the steam engine is to be regarded—innumerable branches of mechanical art have developed from it contributing to the manufacturing world instruments of such power and obedience that no human being could replace.

Hero, of Alexandria, we find mentioned in records of antiquity as being the first inventor of the steam engine. In his early writings he describes three modes of raising water by the power of steam. Hero, it must be remembered, flourished about 130 years before the birth of Christ.

The next attempt must be attributed to a Frenchman, Solomon de Caus, an eminent engineer who lived early in the seventeenth century. His engine was somewhat similar to that of Hero, and consisted mainly of a boiler with two pipes inserted. One of the pipes reached nearly to the bottom of the vessel, while the other first penetrated through the top and was fitted with a valve. The boiler was nearly filled with water and a fire lighted beneath it raised steam. The valve on the short pipe being shut, as soon as steam was formed a fountain of boiling water escaped from the long pipe, Fig. 1.

In 1629 an Italian—Branca by name—published a book in which he described a steam engine which bore certain mechanical details quite in advance of Hero and De Caus. He arranged a wheel on an axis above the boiler, which carried vanes on the periphery—and a jet of steam caused it to revolve.

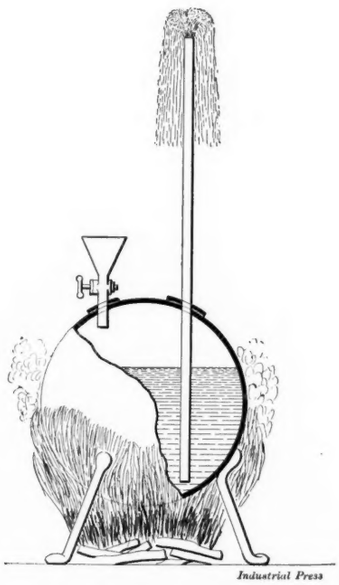

Fig. 1. Solomon de Caus Engine.

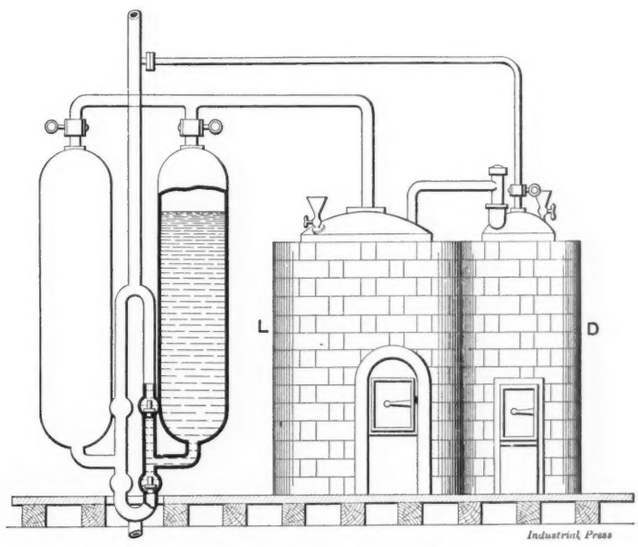

Fig. 3. Capt. Thos. Savery's Engine.

Until the publication of "The Century of Inventions," by the Marquis of Worcester, in 1663, the gigantic capabilities of steam had been almost unknown. The Marquis had a mind ardently disposed to mechanical projects. His first experiment was with a cannon with which he demonstrated the tremendous force of steam by stopping up the mouth and touch hole, nearly filling it with water, and applying heat. We can well believe from his writings that within 24 hours it burst with a great noise. The original manuscript of this work is still preserved in the British Museum, London.

It is generally understood that the Marquis constructed an engine to raise water by steam, and with it he succeeded in

forming a fountain of water forty feet high. Fig. 2 shows this engine as fairly as records will allow. For the boiler arched iron plates with their convex sides turned inward were joined by bolts a few inches apart; outside stay rods were also provided. It will be seen that a boiler constructed on these lines would restrain internal pressure provided the stay-rods and plates were proportioned. The action of the engine can be followed from the illustration and hardly requires a detailed description. Steam and water were admitted alternately to the two vessels containing the delivery pipes.

In 1699 Captain Thomas Savery obtained a patent for raising water and giving motion to all kinds of mill work by steam. From the illustration, Fig. 3, it will be noted that this engine was an improvement upon the Marquis of Worcester's, for it not only raised water by the expansive force of steam, but the condensation was utilized also in raising the water by atmospheric pressure. The receivers being in duplicate an almost continuous stream of water was kept up. In referring to the illustration of Savery's engine, the boiler is shown at *L*, the vessel *D* being an auxiliary boiler.

While improvements and modifications of Savery's engine were engaging the attention of mechanics, Thomas Newcomen and John Cowley, of Dartmouth, two Devonshire men, were busily employing their minds in a series of experiments. Newcomen was not an educated man, but did not lack in inventive skill. It is not known to what extent Cowley participated in the invention, but doubtless he furnished funds for the experiments. The first patent was taken out in 1705 for an atmospheric engine (see Fig. 4). It consists essentially of a cylinder and piston connected to a beam engaging with a weighted pump rod. The downward stroke of the piston was effected by atmospheric pressure on the upper side of it, the under side being subjected to the pressure of live steam from the boiler at the will of the man working the steam and water valves. The vacuum on the under side was caused by allowing cold water to spray into the cylinder after the steam valve to the boiler was closed. The upward stroke was influenced by pressure of steam on the under side of the piston and the weight of the pump rod, mainly by the latter. Although at the present day we observe many imperfections in Newcomen's engine, the latest examples of some types of pumping engines bear traces of the inventor's ingenuity. Humphrey Potter, a boy who attended an engine of Newcomen's, was the first to devise a means of opening and shutting the cocks or valves automatically. This indeed was a wonderful addition when perfected. His first scheme was a catch which engaged in a valve spindle and opened the water inlet immediately the piston was at the top of the cylinder. By this simple invention, which, by the by, Potter, who was quite a boy, thought of in order to allow him to leave the engine and play with his mates*, the speed of the piston was enabled to increase, and sixteen strokes instead of eight were made in a minute.

By this time other inventors were at work and many patents were registered, especially for improvements in the working of the valves, for it was a common occurrence to have a breakdown through the neglect of the attendant, usually a lad.

John Smeaton in 1767 designed an engine for the New River Company, and he considered that the stoppage of water at every stroke, as well as putting the lever-beam, piston, heavy rods and chains, from a state of rest into motion, twice at every stroke, was a great loss of power; he therefore determined to work the engine slower and with larger pumps, and put upon the piston all the load it would bear. To reduce the velocity of the column of water still more, he placed the fulcrum of the beam out of the center and made the stroke of the piston 9 feet, while the pump, which lifted 36 cubic feet, should work only with a 6-foot stroke. This arrangement obliged him to employ a long narrow cylinder of only 18 inches diameter, and from this he expected to obtain other advantages, viz., that every part of the steam being nearer the surface of the cylinder, would be more readily condensed, and in consequence, that a less quantity of injection water would serve the cylinder, which would itself be more heated. He was disappointed, however, for to his surprise instead of requiring less injection water, it wanted considerably more than engines with shorter cylinders, but of larger diameter. Two men, therefore, had to assist in cooling the cylinder by throwing water on it in order to get the engine to work. It was afterward altered by changing the fulcrum of the beam and reducing the load on the piston. Under the new conditions, although the pump stroke was shortened, the engine worked well and so much quicker as not only to raise more water but burn less coal. Through Smeaton's experience with his first engine he never seems to have made further mistakes. In 1765 this talented engineer made a portable steam engine for drawing foundations, etc. It had a pulley or wheel to pull the chain, which communicated motion from the piston to the pump rod, instead of a beam, and the whole machine was supported in one frame of wood, shaped like the letter V inverted. The boiler required no setting in brickwork, but was in the shape of a large tea kettle, and the fire was in the center of it surrounded on all sides by water.

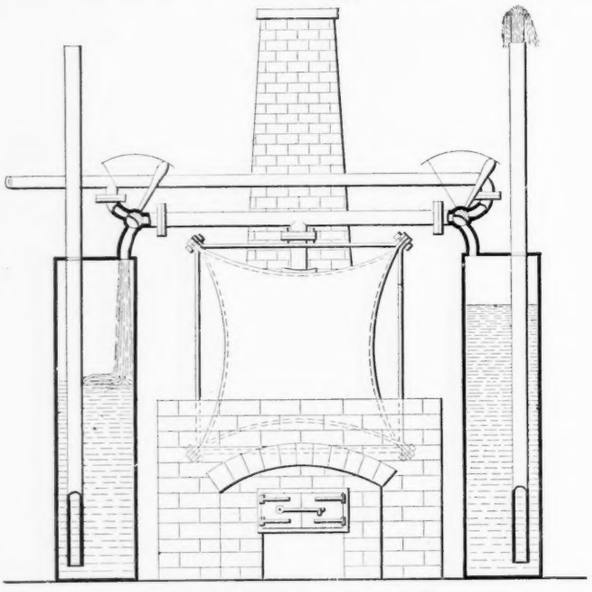

Fig. 2. Marquis of Worcester's Engine.

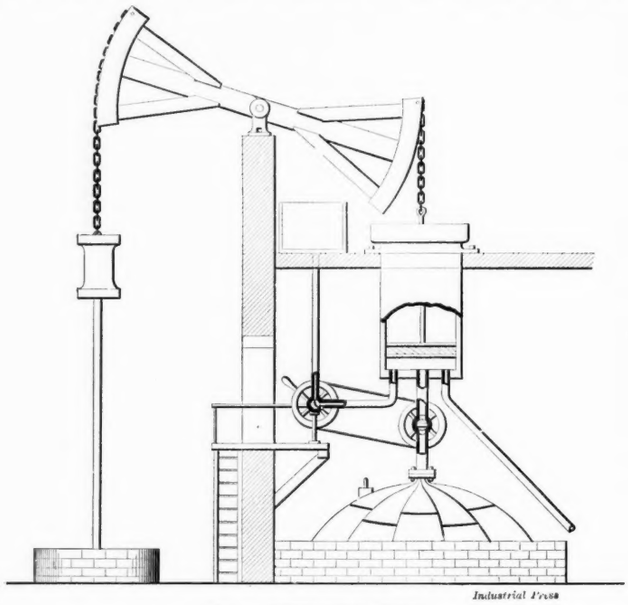

Fig. 4. Newcomen's Engine.

The next illustration, Fig. 5, represents an atmospheric engine constructed upon Newcomen's principle, under the improvements of Smeaton.

Many were the advances which followed during the next few years, but unfortunately space will not permit of description. We must therefore proceed to the time of James Watt and the experiments he made in 1761. By these experi-

* This statement is discredited by Henry Davey. See MACHINERY, January, 1904.

ments Watts made that important discovery of having the steam to do the work on both sides of the piston, and allowing the condensing chamber to be located separately. This was of course the first step toward economy. He found that the loss of steam in alternately heating and cooling the cylinder was not less than three or four times as much as would fill the cylinder and work the engine. Although his means compelled him to employ the simplest and cheapest modes of conducting these experiments, yet the exactness of deductions clearly displays what genius can accomplish under adverse circumstances. Before proceeding, it may be appropriate to allude to a counterclaim of another inventor who suggested a separate condenser. Mr. Hornblower, a rival of Watt, relates that "it occurred to Mr. Gainsborough, a Congregational pastor, and brother to the famous artist of that name, that it would be a great improvement to condense the steam in a vessel distinct from the cylinder, and he undertook experiments to apply the principle he had established." Whether the foregoing is true or not, we must recognize James Watt as the pioneer of the double action steam engine patentees. His originality of thought in this respect has been generally if not universally admitted.

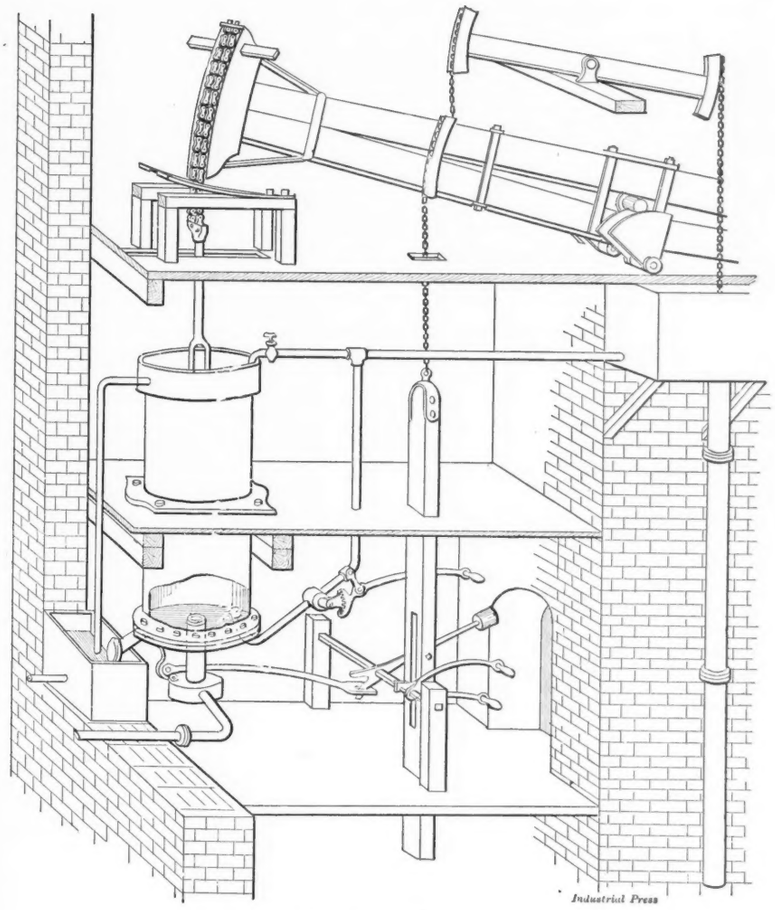

Fig. 5. Smeaton's Engine.

For the purpose of undertaking the building of mining engines and plants, Watt joined hands with Bolton, and the firm built many engines for all parts of the world. Many collieries still possess engines built by them, at the Soho Foundry, Birmingham, still working, and likely to remain for another century. The improvements in details of motion, etc., introduced by Watt are too numerous to be dealt with in this article, but as a concluding illustration we give in Fig. 6 a representative engine which possesses many of the contrivances introduced by him. He was the first to employ a flywheel to equalize the motion of the piston, and as it became an important object to convert the alternate motion into a rotary one, he applied his thoughts to another discovery. The crank could have been used, but that was already the subject of a patent for another purpose. He therefore decided upon cogged wheels, and arranged them in a manner shown in the illustration, this being termed the sun-and-planet motion. The governor was introduced by Watt, although the claim to its invention was made by a Mr. Clarke, of Manchester. The expansion engine was the next advance made by Watt. He also designed several types of rotary engines. Great as was the degree of perfection to which the steam engine had been brought by James Watt, the discoveries which he, together with his predecessors had made, furnished abundant materials for the exercise of future ingenuity.

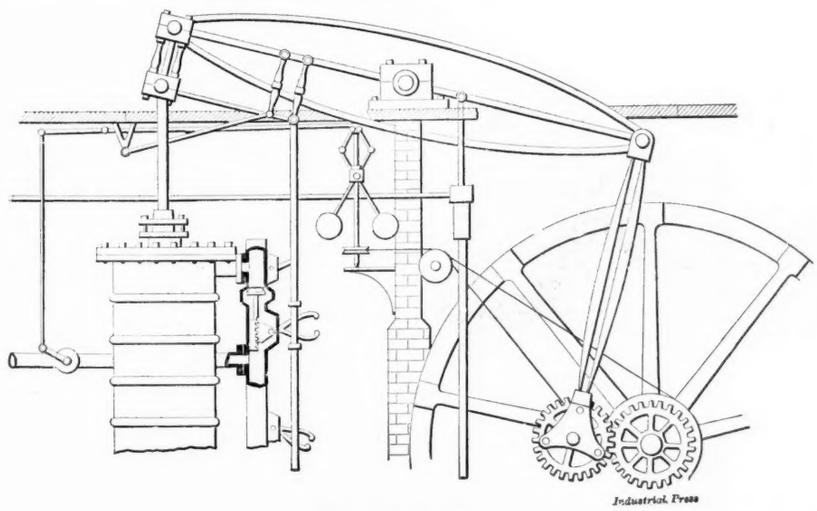

Fig. 6. Watt's Engine.

* * *

The means adopted by the press agent of a big circus for getting free advertising are usually ingenious and not without passing interest, but they are rarely of permanent educational value, to say nothing of being useful to the engineer. An exception, however, seems to be the case in the test of the draft powers of men and animals made in Madison Square Garden recently under the auspices of the ubiquitous "Greatest Show on Earth." In the first trial 100 men on an 80-foot hawser were able to pull only 6,700 pounds, according to a hydraulic pressure gage or dynamometer used for the purpose. Then two draft horses, each weighing 1,700 pounds, were hitched at the end of the hawser. In this position they pulled 2,700 pounds; hitched close to the register they pulled 3,750 pounds. Two more horses of the same weight and hitched to the end of the hawser, pulled 5,125 pounds; close to the register, 5,125 pounds or the same as the two had done. Six horses, each weighing 1,800 pounds, pulled 5,750 pounds at the end of the hawser and 8,875 pounds hitched close up. Two camels (weight not given) pulled 2,750 pounds; a six-ton elephant pushed 4,000 pounds and pulled 8,700 pounds. Two elephants, combined weight 10½ tons, pushed 6,500 pounds besides the resistance of a heavy loaded wagon. The 100 men then pulled 12,000 pounds.

VARIABLE SPEED MOTORS.—3.

WM. BAXTER, JR.

The speed of a motor can be varied in several ways, the simplest of which is by introducing resistance in the armature circuit. This method, although very simple, is very expensive, because the electrical energy used is at all times the maximum amount, the resistance absorbing the portion that the motor does not use. Other methods for obtaining speed variations are arranged so that the electrical energy used is proportional to the power developed by the motor at the time, or nearly so. One way of varying the speed commonly used is by varying the voltage of the current passing through the motor armature. Another way is by varying the current passing through the shunt field coils of the motor, which is accomplished by introducing resistance in this circuit. In compound wound motors the speed is also varied by cutting out the series field coils. By means of the last two methods the speed variation is upward. By the first method the variation is downward, hence with the latter the highest voltage applied to the armature must give the maximum velocity, and with the former the strongest current acting on the field must give the lowest velocity. In some arrangements the field current and armature voltage are both varied, the first to increase the motor speed above the normal and the last to reduce it.

The field current is reduced by the simple process of introducing resistance in the field circuit, but to vary the armature voltage is not so easy. To accomplish the latter result machines called balancing transformers are employed, and by means of these one or more circuit wires are obtained between which and the main lines the voltage is much less than between the mains themselves. Systems of this kind are installed by the Westinghouse, the Bullock and the Crocker-Wheeler companies. In what follows we will describe the Crocker-Wheeler system.

The Crocker-Wheeler Company uses a four-wire system which is obtained by means of a balancing transformer, shown in Fig. 1. This transformer consists of three generators whose armatures are connected in series with each other and directly across the main generator lines in the manner shown in the diagram Fig. 2, in which G represents the main generator, P N the main line wires, A B C the three armatures of the balancing transformers, which are mounted on the same shaft, and m n the two supplementary lines derived from the balancer. In this diagram the voltage of the generator is shown to be 240, and the three balancer armatures develop 40, 80, and 120 volts respectively. These three balancer

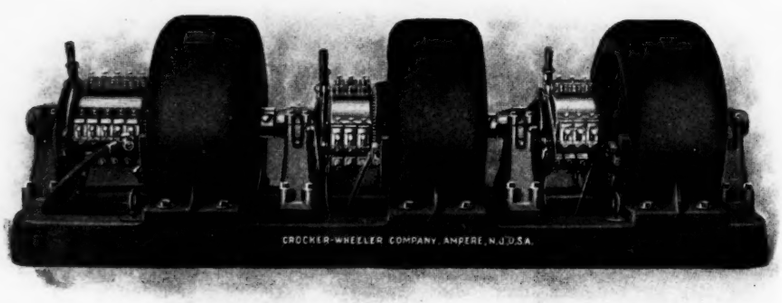

Fig. 1. Balancing Transformer, Crocker-Wheeler Four-wire System.

armatures act in precisely the same manner as the armature of a motor; that is, they develop electromotive forces in opposition to the electromotive force of the generator, and as the three combined develop a voltage nearly equal to that of the generator, the current that passes through them when no motors are in use is very small, just enough in fact to furnish the power required to rotate them. The circles numbered from 1 to 8 represent motors connected in the circuit in different ways so as to be subjected to different voltages. A motor connected as at 1 would be acted upon by the voltage balanced by C, which is 40. A motor connected as shown at 2, would be subjected to 80 volts, while a motor in position 3, would be subjected to 120 volts. A motor connected as at 4 would be acted upon by the combined electromotive forces of B and C, which is 160 volts, and if connected as at 5, it would be acted upon by the combined electromotive forces of A and B, which is 200 volts, while when connected as at 6 it would be acted upon by the main generator electromotive force of 240 volts. Thus it will be seen that with a single generator, and a three-armature transformer, six different voltages can

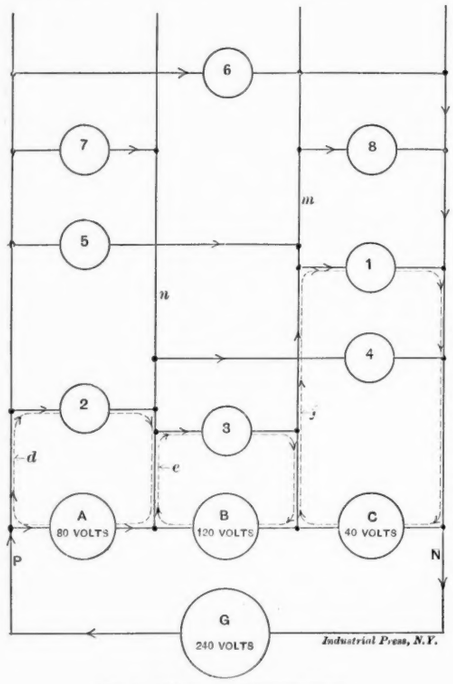

Fig. 1. Diagram of Transformer.

be obtained. These six voltages will give six different motor speeds, and by means of resistance introduced in the armature circuit, six or more intermediate speeds can be obtained.

In operating motors with this system, they are connected as shown by circle 1, when started, and are then passed to positions 2, 3, 4, etc., until the desired velocity is attained.

As the manner in which the currents circulate in a system of this kind is not very generally understood, we will explain the subject briefly. Let us suppose we have a single motor that requires a current of 100 amperes. The question is, where does the current come from when it is connected in the six positions shown, and what portion of the current passes through the transformer armatures A, B, C? When the motor is connected in position 1, a current from the generator G will pass through P, and through the transformer armatures A B to wire m, and thus through the motor to line N. This current in passing through armatures A and B causes them to act as motors and the energy developed by them is absorbed in driving C as a generator, which develops a current that circulates in the local circuit indicated by line f and passes through the motor. Thus the current that actuates the motor is supplied in part by main generator, G, and in part by armature C. We now desire to know what portion of the current is furnished by the generator, and what portion by armature C. To make the explanation as simple as possible we will assume that there is no loss of energy in the transformation, that is, that the electrical energy absorbed by A and B is equal to that given back by C. Making this assumption, the voltage of C multiplied by its current must be equal to the product of the sum of the voltages of A and B multiplied by the current passing through them, so that the two currents must be inversely proportional to the volt-

ages. The voltage of C is 40 and $A + B = 200$; hence, current through A and B is 16.66 amperes, and current through C is 83.33.

When the motor is connected in position 2, armature A acts as a generator, and is driven by B and C. The voltages now are, $A = 80$, $B + C = 160$, current through $A = 66.6$ amperes, which circulates in the circuit d; current through B and $C = 33.3$ amperes. When the motor is in position 3, the armatures A and C act as motors and B is driven as a generator. The voltage of $A + C = 120$ and voltage of $B = 120$, so that the generator current of B will be equal to the current from G that passes through the other two armatures; that is, both currents will be 50 amperes. When the motor is connected in position 4, armature A acts as a motor and B, C,

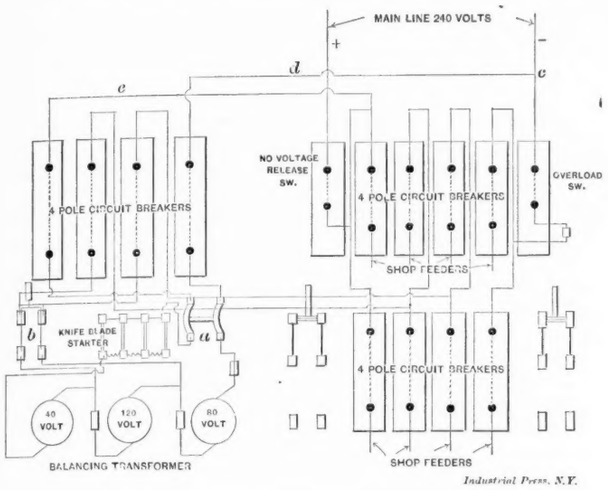

Fig. 3. Showing how Balancer is Connected in the Circuit.

as generators and the strength of currents can be calculated in the manner above explained. In positions 5, A and B act as motors, and C as generator. In position 6 all the transformer armatures act as motors, and require just enough energy to keep themselves in motion, the current passing through them being very small.

If five motors are in service, and at any instant are connected as shown by circles 1 to 5, each one taking the same amount of current, then 2 will supply current for 4, and 5 will supply current for 1, while the current for 3 will be derived in part from B and in part from G through A and C. If there were two more motors connected, as at 7 and 8, no current would be drawn from A, B, C, for then motors 1, 2, 3, could be regarded as one circuit, while 4, 7, and 5, 8 would form two other circuits, the three circuits being directly across the mains P and N.

From the foregoing it will be seen that the balancing transformer armatures acting as generators provide any excess of current required, above that furnished by the main generator G, between any two wires of the system, the power to generate this current being furnished by the armature or armatures that act as motors at the time.

In the Crocker-Wheeler system the shunt field coils of the motors are connected with the mains P N at all times, and only the armature is changed from one voltage to another. If the field were changed together with the armature, the velocity would change very little.

The diagram Fig. 2 is a simple arrangement of circuits to show the action of the balancing transformer, and does not give a correct idea of the actual way in which the circuits are arranged in a practical installation. In practice it is necessary to provide switches to connect and disconnect the apparatus, circuit breakers to protect against abnormal currents, cut-outs to open the circuit whenever the current fails and save the balancer armature from being burned out if the current is re-established after the balancer has come to a state of rest. In addition suitable switches must be provided to start the balancer, for it must be remembered that this is a machine that acts in the same manner as a motor, and in starting it a resistance must be introduced in the armature circuit to keep the current down within safe limits. After the balancer has run up to normal speed the resistance is cut out and thereafter it runs the same as a motor running free, except when called upon to furnish currents.

The diagram Fig. 3 shows the way in which the balancer is connected in the circuit, and the apparatus used in connection therewith. The mains marked + and — run to the generator terminals. The + line is connected with a circuit breaker that opens the circuit whenever the current fails, or the voltage drops to an abnormal point from any cause. Through this circuit breaker, as shown by the dotted line, the current passes to wire e and thence to a switch a, and through a starting switch to the left side of the balancer. This starting switch is shown in Fig. 4, and is arranged so as to include a number of resistances between its several blades. The — line is connected with an overload circuit breaker, which opens the circuit whenever the current becomes too strong. From the right side terminal of the balancer the current passes to the switch a, and thence to wire d, and to the — line at point c. The foregoing indicates the circuit through the balancer when the circuit breaker directly above it is closed. When the circuit is first closed the balancer is connected with the resistance of the knife blade starter in the armature circuit, and as the blades of this switch are closed one after the other the sections of the resistance are cut out in precisely the same manner as in starting a motor. When the last blade of the starter is closed all the resistance is cut out of the circuit. If now the switch b is closed the intermediate terminals of the balancer, that is, those that connect with wires n and m in Fig. 2 are connected with the intermediate terminals of the shop feeder circuit breakers, which are shown at the right side of cut, Fig. 3. Two of these circuit breakers are shown and each one is connected in a separate set of shop feeders. Thus it will be seen that one four-pole circuit breaker is provided to protect the balancer and in addition circuit breakers are provided for each independent set of shop feeders.

The motors used with this system may be either series, shunt or compound wound, as the case may require. For direct connected machine tools they are generally compound wound. Whatever the winding may be a properly constructed

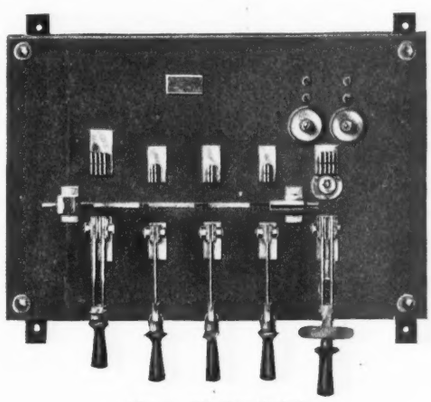

Fig. 4. Starting Switch.

controller must be used to effect the changes in circuit connections required in passing from one voltage to another. The diagram Fig. 5 shows the arrangement of contacts and connections for a controller adapted to a compound wound motor. The motor is shown at the bottom of the diagram. The points marked C, CC, are the terminals of the shunt field coils, those marked S, SS, are the terminals of the series field coils, while A, AA, are the armature terminals.

In the upper part of the diagram, which represents the controller, the black squares are contact plates attached to the surface of a cylinder that is arranged to be rotated by hand. The vertical row of small circles marked AA, S, S_1, etc., are stationary contacts so located that they press upon the cylinder contact plates. The four line wires shown at the right and marked $M1$, $M2$, $M3$, $M4$, connect with a set of shop feeders, and by means of a four-pole main switch are connected

or disconnected from the controller terminals. As soon as this switch is closed the circuit through the shunt field coils of the motor is closed, the terminals of these coils being connected with the outside lines $M1$ and $M4$, as can be clearly seen by tracing the connecting lines from the stationary controller terminals C, CC, to the similarly marked motor terminals. If the controller cylinder is rotated until the stationary contacts reach the vertical line marked 1, on the left side of the diagram, the motor will start, with the armature and the series coils connected in series with each other and with the lines $M1$ and $M2$, which give the lowest voltage. In this position the starting resistance connected in wire A will also be included in series with the armature. The circuit will be as follows: From line $M1$ to stationary controller contact c, which will now be resting on b. From b through wire d to c, which is connected with the row of cylinder plates below it, as clearly shown. The stationary contacts at f connect the two rows of cylinder contacts and thus the current can flow to stationary contact $R1$ and then through the armature resistance to armature terminal A, and through the armature to AA. From here, by wire g, the current passes to the top stationary contact AA of the controller, and as the two upper rows of cylinder contacts are connected with each other on the vertical line 5, the current can reach

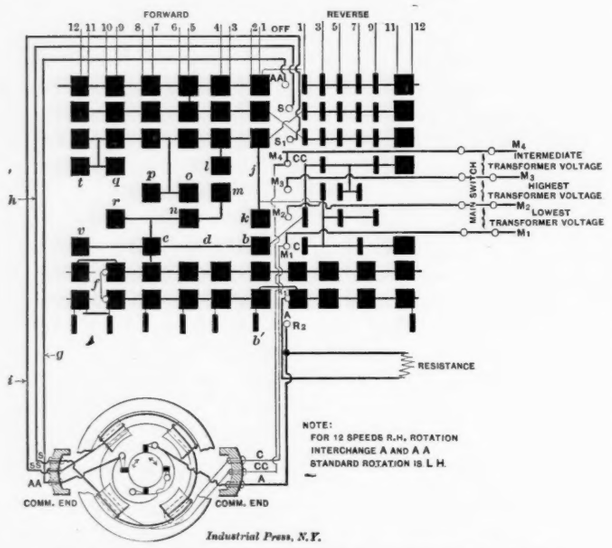

Fig. 5. Arrangement of Contacts and Connections for Controller.

the stationary contact S; and then by way of wire h, it flows to the terminal S of the motor series coils, through these coils to SS and thence by wire i to S_1 on the controller. From the stationary contact S_1 of the controller, the current passes through connection j to cylinder contact k, upon which stationary contact $M2$ is resting. Thus the current returns to line $M2$, and the voltage acting on the motor armature is the lowest.

When the controller cylinder is rotated further, so that the stationary contacts come on the vertical line 2, all the circuit connections above explained remain unchanged, but in addition the lower stationary contact, $R2$, passes onto cylinder contact, b', and thus the armature resistance is short circuited and the motor speed is increased.

When the controller is rotated until the stationary contacts come on vertical line 3, the stationary contacts $M1$ and $M2$ pass off the cylinder contacts b and k and stationary contacts $M3$ and $M4$, pass onto cylinder m l. This change disconnects the motor armature from the low voltage lines and connects its terminals with the intermediate voltage lines $M3$ and $M4$. Rotating the controller to the vertical line 4 acts as on line 2 to cut out the armature resistance and increase the armature velocity. When the controller is rotated to line 5, the stationary contacts, $M3$, $M4$, pass off of m and l, and contacts $M2$ and $M3$ ride over n and o, thus connecting the motor armature with lines $M2$ and $M3$, which give the highest voltage from the balancing transformer.

When the controller is rotated to line 7, stationary contact, c, is connected with cylinder contact e, and stationary contact $M3$ is connected with cylinder contact p, thus connecting the motor armature with lines $M1$ and $M3$, and this gives a voltage equal to the sum of the highest and the lowest. When the controller is advanced to line 9 stationary contact $M2$ rides over cylinder contact r, and stationary contact $M4$ rides over q, thus connecting the motor armature with lines $M2$ and $M4$, which gives a voltage equal to the sum of the highest and the intermediate. When the controller is advanced to line 11, stationary contact c rides over cylinder contact v, and stationary contact $M4$ rides over cylinder t, thus connecting the motor armature with the outside lines $M1$ and $M4$, which run directly to the generator terminals and give the full voltage of the latter.

From the foregoing it will be seen that by changing the conections between the motor armature and the four line wires six speeds are obtained, and by cutting the armature resistance out for each connection, six other speeds are obtained. The armature resistance is so proportioned that the speed obtained when it is cut out is half way between the speeds obtained by two succeeding voltages. Thus, if the speeds on lines 3 and 5 are 300 and 400, respectively, the speed on line 4 will be 350.

When the controller is rotated in the opposite direction, the motor is reversed. With the construction of controller shown in the diagram, the velocities for the reverse motion are those due to the changes in voltage only, except for the highest speed, obtained on line 12, which is given by cutting out the armature resistance.

A study of this controller diagram will show that in so far as effecting the necessary changes in the circuit connections is concerned, the two upper rows of cylinder contacts could be replaced by a single plate of a size large enough to cover all of them. This is evident from the fact that all these contacts are electrically connected with each other. This is also true of the two lower rows that are connected by the sliding bridge, f. A number of contacts are used however, instead of a single plate so as to be able to break the circuit at a number of points when the armature is disconnected from lines of one voltage and connected with other lines of a different voltage, and thereby reduce the sparking to a point where it is harmless. If this construction were not used the sparking would soon burn the controller contacts to such an extent as to render the apparatus practically useless.

* * *

ZINC ALUMINUM ALLOYS.

In a valuable paper on light aluminum alloys read before the American Society for Testing Materials by Mr. Joseph W. Richards at the Delaware Water Gap meeting last July, special reference was made to the valuable characteristics of zinc-aluminum alloys. Zinc is the cheapest and at the same time one of the most efficient of the metals for improving the mechanical properties of aluminum. Proportions up to 33 per cent. of zinc are used, the alloy having this proportion of zinc being known as the "Sibley casting alloy." The zinc-aluminum alloys are malleable up to 15 per cent., and above that, as intimated, are still useful for making castings. Only the purest zinc and the purest aluminum should be used, to get the best alloys. Casting in chills gives much better results than casting in sand; in the latter case the slow cooling seems to cause a separation.

The alloys are made by first melting all the aluminum to be used, in a clean graphite crucible. It is brought a little above melting point so that as the zinc is added, in small pieces, it does not chill the aluminum, but is all absorbed directly as it is added. The melting point decreases as zinc is added, so that if the zinc is added slowly the alloy remains always melted. A wrought-iron rod can be used as a stirrer, if the heat does not at any time go above low redness. The metal should be poured as cold as is practicable; when much hotter than its melting point it is not so thinly fluid as when somewhat cooler. The crucible should be kept covered while melting the aluminum, and no charcoal or flux put into the crucible, except, possibly, a little salt.

The alloy with 15 per cent. zinc can be rolled and drawn. In

chill castings it has an elastic limit of 16,000 pounds per square inch, tensile strength 22,330 pounds, elongation 6 per cent. in two inches, and reduction of area 10½ per cent. The alloy with 25 per cent. zinc has a tensile strength of 22,000 pounds, extension 1 per cent., and reduction of area 3 per cent., when cast in sand. When cast in chill-molds its tensile strength is 35,000 to 45,000 pounds, extension 1 per cent., with a close fracture like high-carbon steel. Its specific gravity is 3.4, which shows a contraction of 14 per cent. in the bulk of the constituents while alloying, and since 1 part of zinc has only one-eighth the volume of three parts of aluminum, the remarkable conclusion follows that the aluminum takes up one-third of its weight of zinc and actually decreases in volume some 2 per cent. in doing it. This probably accounts for the close grain and good working qualities of this alloy. It is non-magnetic, has a fine color, takes a high polish, and bids fair to be the most generally useful of all the light aluminum alloys.

* * *

STRAIGHT AND CIRCULAR FORMING TOOLS.

JOS. M. STABEL.

Jos. M. Stabel.

Almost every machinist who is engaged in tool work will have more or less to do with the making of forming tools. These may be used for shaping sheet metals, or for use under the drop hammer, or again, they may be employed in the lathe, planer, shaper or milling machine. It is the object of the present article, however, to confine ourselves to a description of the straight and circular forming tools that are so universally used on screw machines. For certain purposes these tools need not be of a very exact nature, while again, they require great accuracy in their construction as they are to be used for the manufacture of interchangeable parts. As the old saying goes: "It is easy enough to make one alike," but when it is necessary to make duplicate tools it is quite a difficult task.

While there are numerous methods employed for making these tools, the writer has never seen one described which will enable the machinist to compute the distances, diameters or angles so as to produce the required dimensions on the finished work. If, for instance, a circular tool is to produce certain diameters on the work, and we transfer the exact ratio of these different diameters from the drawing to the forming tool, we will not be able to get the required dimensions when the cutting edge of the tool is one-quarter of an inch below the center. If we have to make a straight forming tool which, in the machine, is to stand at an angle of 15 degrees, we can, when it is not very wide, avail ourselves of the use of a master forming tool. When, however, the tool is very wide, so that the use of the master tool is unpractical, and it is necessary to mill or plane it to shape, some computation is then necessary in order to make the shape such that it will produce tho required dimensions on the work when the tool is held at an angle in the machine.

We will first consider a method of making straight forming tools which has proved satisfactory and will produce accurate results if properly manipulated. We will suppose that we are called upon to make the tools for producing with accuracy such a piece of work as shown in Fig. 1, and that a master former is to be made so that at any future time the forming tool can be duplicated at small expense. The master former will be made as in Fig. 2, being an accurate duplicate of our model with the addition of a shank about an inch and a half in length on each end, these shanks serving as an arbor for the tool.

The formed part is then milled down to the center, to produce a cutting face for future operations, after which it is hardened, tempered and the face accurately ground.

To facilitate this face grinding the fixture shown in Fig. 3 is employed, the work being done on a surface grinder. The most essential point to be observed in grinding such a former is to have the cutting face radial, and this is accomplished by the use of this fixture. The fixture is placed on the grinder so that the line of centers is at right angles with the emery wheel; the center *c* is removed from the block *d* and the emery wheel is brought to bear on the ball *b*, which is a running fit in the lever *a*. This lever is fulcrumed on the block *d* and is held upward by means of a spring attached to the short arm. With the emery wheel at rest, the table of the grinder is now run back and forth and the wheel fed downward until it reaches such a position that when it is passed over the ball *b* the front end of the lever will indicate zero. This shows the operator that the periphery of the wheel is in perfect alignment with the center of the fixture. The center *c* is then replaced and the master former, with dog attached, is placed between the centers and ground. By the use of the handle *e*, which engages the adjustable center, the former is turned slightly after each cut across the face until a keen cutting edge on the same is obtained.

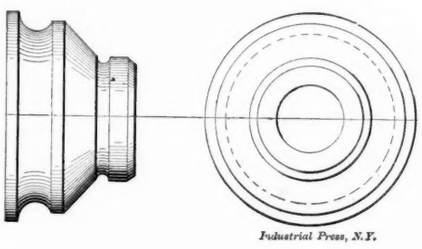

Industrial Press, N.Y.

Fig. 1.

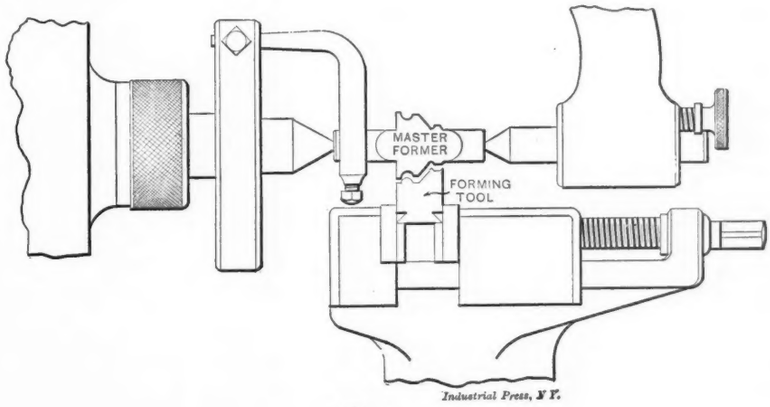

Industrial Press, N.Y.

Fig. 4.

The block from which the forming tool is to be made is placed in the vise of the milling machine and roughed out as near to the formed shape as possible, after which the master former is substituted for the milling cutter, as shown in Fig. 4. The cutting face must stand at the same angle with perpendicular as the forming tool is to stand when placed in the screw machine, and it is very essential to observe this point if accurate results are desired. When the proper angle of the former has been obtained it is secured in position by a wooden wedge tapped in between the cone and the frame of the milling machine and the table is then run back and forth until the forming tool is cut to the desired shape.

If an extra long forming tool is required, say eight or nine inches in length, and it is desired to prolong the life of the master former, we would then make use of a second master

---

JOSEPH M. STABEL was born at Buffalo, N. Y., in 1874. He has served with the Winchester Repeating Arms Co., the Stanley Instrument Co., the Rochester Cash Register Works, the Automobile Co of America in the various capacities of gagemaker, toolmaker, designer and tool-room foreman. His specialty is tool work in all its branches. He is at present employed by the Goulds Mfg. Co., Seneca Falls, N. Y., where he has charge of the making and designing of tools.

former, constructed as previously described for the forming tool. This second master former fits into a holder, as shown in Fig. 5, and when it is being formed should be held at right angles with the bed of the machine. It is then necessary to make a similar piece to be used for making the working formers. To avoid confusion we will call this first piece No. 1 and the next piece to be made No. 2. This second piece must have the form of No. 1 transferred to it and for this purpose it is placed in the block shown in Fig. 6, which holds it at an angle

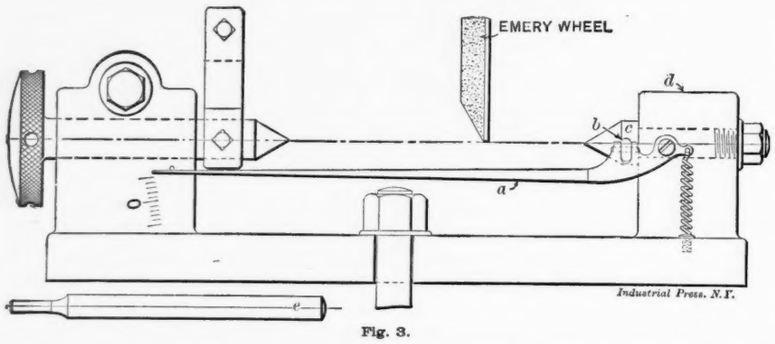

Fig. 3.

of 10 degrees with the shaper vise. Piece No. 1, in its holder, is placed in the toolpost of the shaper where a tapered block holds it at a corresponding angle with piece No. 2, so that their faces are in line, as shown in Fig. 7. By locating these pieces in this way the form of No. 1 can be accurately transferred to No. 2, at the same time giving No. 2 the required clearance so that it can then be held squarely in the shaper toolpost and used to shape the forming tools that are held in the shaper vise at an angle of 10 degrees.

To make this last method clear we must bear in mind that at whatever angle the forming tool stands when in the screw machine, this angle must be maintained for setting the face of the master former. This transfers the form to No. 1 and overcomes the discrepancy caused by the tool standing at an

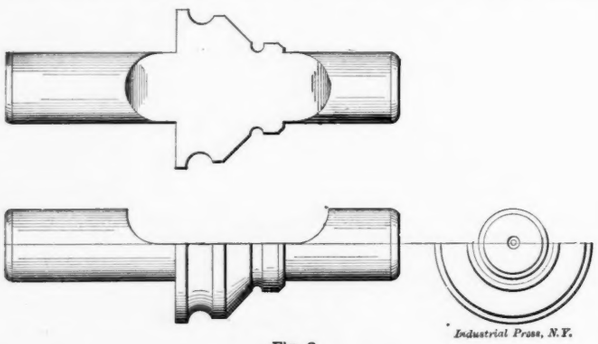

Fig. 2.

angle in the screw machine, and this when in turn transferred to No. 2 gives it the clearance required and the exact shape of No. 1.

[There are numerous other methods in use for accomplishing this class of work and some, no doubt, may be simpler, but they do not yield such accurate results. One of these methods consists in filing a templet to fit the model and from this making the shaping tool, which in turn is placed in the shaper with the face standing at the same angle as will the forming tool when placed in the screw machine. Then the forming tool blank is put in the vise and shaped up in the usual way.

The foregoing methods have all been based upon the duplication of the formers by mechanical means, but we will now consider other methods in which the dimensions of the formed tool are computed from the ratios of the different diameters on the work. We have already made it clear that an error will exist if we transfer to the tool the exact differences in the various radii on the work, and it is to overcome this error that we subtract from the dimensions of the work such differences as are caused by the tool standing at an angle in the machine.

As will be readily seen in the figure at the head of Table I., the line $a\ c$ is always larger than $b\ c$ and as $a\ c$ must be equal to the difference between two radii on the work, $b\ c$ will consequently equal $a\ c \times$ cosine of the angle at which the tool is to rest in the machine. Table I is arranged to facilitate the computation of the tool dimensions to give required dimensions on the work. In the first column is given the distance $a\ c$, or the actual cutting distance; and the second, third and fourth columns give corresponding distances $b\ c$ when the tool is to stand at an angle of ten, fifteen or twenty degrees in the machine.

To illustrate the use of this table we will take as an example the piece shown in Fig. 8, the respective diameters of which are 1.75 inch, .75 inch and 1.25 inch. We will first reduce these diameters to their respective radii, which equal .875, .375 and .625. Now the difference between the first and the second is .500, which would equal the actual cutting edge on the tool, or $a\ c$. Referring to our table we find in the first column our distance $a\ c = .500$, and if the tool is to set at an angle of 15 degrees we find our corresponding value for $b\ c$ in the third column; $b\ c = .482965$. In the same way we find our second step which, for a difference in radii of .25, equals $.193186 + .048297 = .241483$. If we then plane our forming tool so that the steps will measure .4829 and .2415 respectively, when this tool is placed in the machine with the cutting face perfectly central with the work, and the front face at an angle of 15 degrees, the diameters turned will correspond to those in the sketch.

It often happens that an angle is to be turned upon the piece and this angle will naturally change when the tool is placed at an angle. Table 2 has therefore been computed to give the

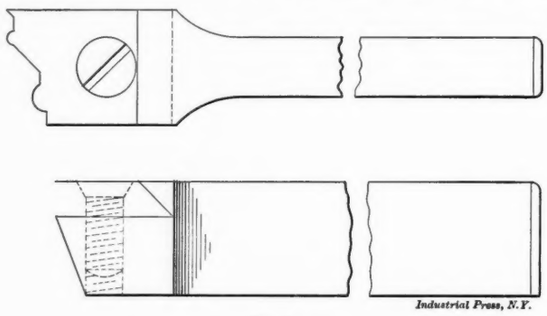

Fig. 5.

angle that is to be made on the tool for obtaining a required angle on the work. The angles given are measured from the center line of the piece or, what is the same thing, with the formed face of the tool. Thus in Fig. 8 we have an angle of 45 degrees and as the forming tool will rest at an angle of 15 degrees in the machine, we refer to the third column of Table 2, where we find 44 degrees as the proper angle for the tool and if the tool is made to this angle it will cut the work

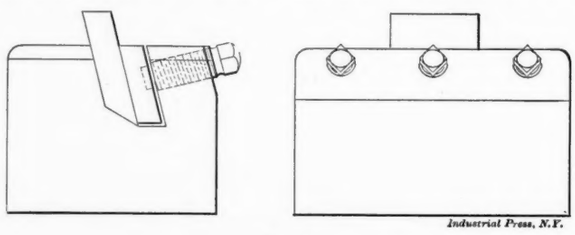

Fig. 6.

to the 45 degrees required. The angular difference, as will be seen, is the greatest at 45 degrees, from which it decreases at about the same rate toward zero and 90 degrees.

Circular forming tools are used in the same capacity as straight ones and to make them accurately entails quite a little computation. Whenever a circular tool has two or more diameters a discrepancy will exist between the different diameters on the tool and on the work, if the cutting face is below the center of the tool; and table No. 3 has been computed to show these discrepancies and to assist in determining the proper

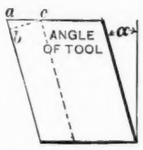

TABLE NO. 1. USED IN MAKING STRAIGHT FORMING TOOLS.

$a\,c$ = Actual Cutting Distance.	$b\,c$ Angle of Tool 10°	$b\,c$ Angle of Tool 15°	$b\,c$ Angle of Tool 20°
.001	.000985	.000966	.000940
.002	.001970	.001932	.001879
.003	.002954	.002898	.002819
.004	.003939	.003864	.003759
.005	.004924	.004830	.004699
.006	.005909	.005796	.005638
.007	.006894	.006762	.006578
.008	.007878	.007727	.007518
.009	.008863	.008693	.008457
.010	.009848	.009659	.009397
.020	.019696	.019319	.018794
.030	.029544	.028978	.028191
.040	.039392	.038637	.037588
.050	.049241	.048297	.046985
.060	.059089	.057956	.056381
.070	.068937	.067615	.065778
.080	.078785	.077274	.075175
.090	.088633	.086934	.084572
.100	.098481	.096593	.093969
.200	.196962	.193186	.187938
.300	.295443	.289779	.281907
.400	.393924	.386372	.375876
.500	.492405	.482965	.469845

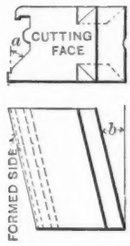

TABLE NO. 2. COMPUTED ANGLES ON STRAIGHT FORMING TOOLS.

a = Angle on Cutting Face of Forming Tool.	Angle Measured on Formed Side, which coincides with Angle A on Cutting Face, when Forming Tool stands at 10, 15 or 20 degrees from Perpendicular.		
	b = 10 degrees.	b = 15 degrees.	b = 20 degrees.
5°	4° — 55′	4° — 50′	4° — 42′
10	9 — 51	9 — 40	9 — 24
15	14 — 47	14 — 31	14 — 08
20	19 — 43	19 — 22	18 — 53
25	24 — 40	24 — 15	23 — 40
30	29 — 37	29 — 09	28 — 29
35	34 — 35	34 — 04	33 — 20
40	39 — 34	39 — 01	38 — 15
45	44 — 34	44 — 00	43 — 13
50	49 — 34	49 — 01	48 — 14
55	54 — 35	54 — 04	53 — 18
60	59 — 37	59 — 08	58 — 26
65	64 — 40	64 — 14	63 — 36
70	69 — 43	69 — 21	68 — 50
75	74 — 47	74 — 30	74 — 5
80	79 — 51	79 — 39	79 — 22
85	84 — 55	84 — 49	84 — 41

TABLE NO. 3. FOR COMPUTING DIAMETERS OF CIRCULAR FORMING TOOLS.

$O\,C$ = Radius of forming tool.
$O\,B$ = Second radius of forming tool.
$O\,A$ = Distance from center to cutting face of tool.
$A\,B = \sqrt{O\,B^2 - O\,A^2}$
$B\,C = \sqrt{(O\,C^2 - O\,A^2)} - \sqrt{(O\,B^2 - O\,A^2)}$

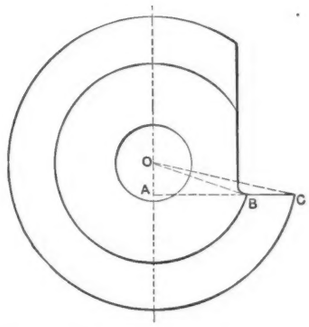

Diameter of Tool = 2 O C	Radius of Tool = O C	Cutting Face 1/8″ below Center.				Cutting Face 3/16″ below Center.				Cutting Face 1/4″ below Center.				Cutting Face 5/16″ below Center.			
		A C	Correction for 1/16″ Difference in Diameter.	Correction for 1/8″ Difference in Diameter.	Correction for 1/4″ Difference in Diameter.	A C	Correction for 1/16″ Difference in Diameter.	Correction for 1/8″ Difference in Diameter.	Correction for 1/4″ Difference in Diameter.	A C	Correction for 1/16″ Difference in Diameter.	Correction for 1/8″ Difference in Diameter.	Correction for 1/4″ Difference in Diameter.	A C	Correction for 1/16″ Difference in Diameter.	Correction for 1/8″ Difference in Diameter.	Correction for 1/4″ Difference in Diameter.
1	.500	.48412	.....	.....	.....	.46351	.....	.....	.....	.43301	.....	.....	.....	.39031	.....	.....	.....
1 1/8	.5625	.54843	.00362	.....	.....	.53033	.00864	.....	.....	.50389	.01676	.....	.....	.46771	.02980	.....	.....
1 1/4	.625	.61237	.00288	.00650	.....	.59621	.00676	.01540	.....	.57282	.01286	.02962	.....	.54126	.02210	.05190	.....
1 3/8	.6875	.67604	.00234	.....	.....	.66143	.00544	.....	.....	.64044	.01024	.....	.....	.61237	.01722	.....	.....
1 1/2	.750	.73951	.00194	.00428	.01078	.72618	.00450	.00994	.02534	.70710	.00832	.01856	.04818	.68179	.01384	.03106	.08296
1 5/8	.8125	.80282	.00162	.....	.....	.79056	.00376	.....	.....	.77308	.00696	.....	.....	.75000	.01142	.....	.....
1 3/4	.875	.86602	.00140	.00302	.....	.85467	.00322	.00698	.....	.83852	.00588	.01284	.....	.81729	.00958	.02100	.....
1 7/8	.9375	.92112	.00120	.....	.....	.91855	.00276	.....	.....	.90355	.00506	.....	.....	.88388	.00818	.....	.....
2	1.000	.99215	.00106	.00226	.00528	.98226	.00242	.00518	.01216	.96825	.00440	.00946	.02230	.94991	.00706	.01524	.03624
2 1/8	1.0625	1.05512	.00094	.....	.....	1.04582	.00212	.....	.....	1.03267	.00384	.....	.....	1.01550	.00618	.....	.....
2 1/4	1.125	1.11803	.00082	.00176	.....	1.10926	.00188	.00400	.....	1.09687	.00340	.00724	.....	1.08072	.00544	.01162	.....
2 3/8	1.1875	1.18090	.00074	.....	.....	1.17260	.00168	.....	.....	1.16086	.00294	.....	.....	1.14564	.00484	.....	.....
2 1/2	1.250	1.24370	.00066	.00140	.00316	1.23580	.00150	.00318	.00718	1.22475	.00278	.00572	.01296	1.21032	.00436	.00920	.02082
2 5/8	1.3125	1.30653	.00060	.....	.....	1.29904	.00138	.....	.....	1.28847	.00244	.....	.....	1.27475	.00386	.....	.....
2 3/4	1.375	1.36930	.00054	.00114	.....	1.36215	.00122	.00260	.....	1.35208	.00222	.00466	.....	1.33901	.00352	.00738	.....
2 7/8	1.4375	1.43205	.00050	.....	.....	1.42521	.00112	.....	.....	1.41559	.00202	.....	.....	1.40312	.00322	.....	.....
3	1.500	1.49478	.00046	.00096	.00210	1.48823	.00104	.00216	.00476	1.47902	.00186	.00388	.00854	1.46708	.00292	.00614	.01352
3 1/8	1.5625	1.55749	.00042	.....	.....	1.55120	.00094	.....	.....	1.54237	.00170	.....	.....	1.53093	.00270	.....	.....
3 1/4	1.625	1.62018	.00038	.00080	.....	1.61414	.00088	.00182	.....	1.60565	.00156	.00326	.....	1.59466	.00246	.00516	.....
3 3/8	1.6875	1.68286	.00036	.....	.....	1.67705	.00082	.....	.....	1.66883	.00144	.....	.....	1.65831	.00230	.....	.....
3 1/2	1.750	1.74553	.00034	.00070	.00150	1.73992	.00074	.00156	.00338	1.73205	.00136	.00280	.00606	1.72187	.00212	.00442	.00958
3 5/8	1.8125	1.80818	.00032	.....	.....	1.80277	.00070	.....	.....	1.79518	.00126	.....	.....	1.78535	.00196	.....	.....
3 3/4	1.875	1.87082	.00028	.00060	.....	1.86560	.00066	.00136	.....	1.85826	.00116	.00242	.....	1.84877	.00186	.00382	.....
3 7/8	1.9375	1.93346	.00026	.....	.....	1.92840	.00060	.....	.....	1.92130	.00108	.....	.....	1.91213	.00172	.....	.....
4	2.000	1.99608	.00024	.00050	.00100	1.99119	.00058	.00118	.00254	1.98431	.00102	.00210	.00452	1.97543	.00160	.00332	.00714

diameters of formed tools to give required diameters on the work. The first and second columns give the diameters and radii respectively of the formed tools, while the third column gives the distance from the vertical center line of the tool to these radii when the cutting face is ⅛ inch below the horizontal center line. The next three succeeding columns give the constants that are to be used in computing the various diameters of the forming tools when the cutting face is ⅛ inch below the horizontal center line, as will be made clear in the example following. In the remaining columns are tabulated

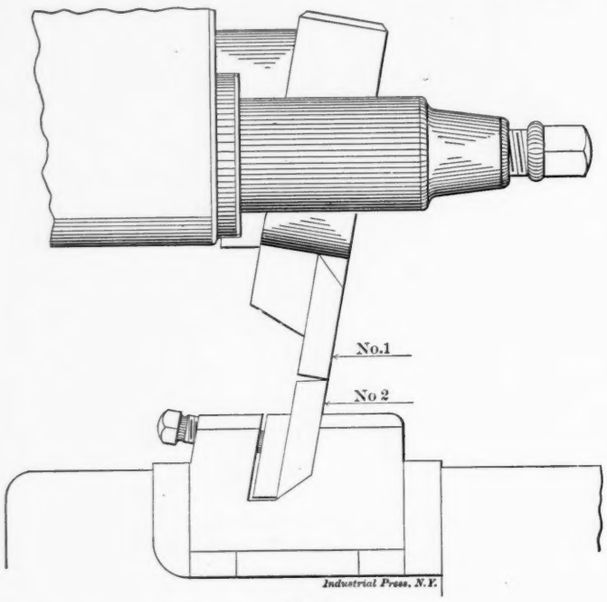

Fig. 7.

similar values for these, for use when the cutting face of the tool is 3-16, ¼, and 5-16 inch below the horizontal center line of the tool. As there is no standard distance for the location of the cutting face the table has accordingly been prepared to correspond with such distances as are most commonly used.

As an example illustrating the use of these tables we will consider that we are to make a circular forming tool for the piece shown in Fig. 8, and that the largest diameter of the tool is to be 3 inches, and its cutting face ¼ inch below the horizontal center line. The first step will be to determine approximately the respective diameters of the forming tool and then to correct them by the use of the tables.

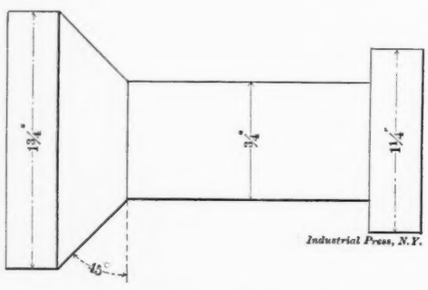

Fig. 8.

The diameters of the piece are 1.750, .750 and 1.250 respectively, and to produce these with a 3-inch cutter the diameters of the tool would be approximately 2.000, 3.000 and 2.500 inches respectively. The first dimension, 2.000, is 1.000 in diameter less than the diameter of the tool, and for the correction we would look in the column of differences for inches, but as the tables are only extended to half inches we will be obliged to obtain our correction in two steps. On the line for 3-inch diameter, and under corrections for ½ inch, we find .00854; and then on line of 2½, and under the same heading, we find .01296, consequently our total correction would be .00854 + .01296 = .02150. This correction is added to the approximate diameter, making the exact diameter of our first step 2.000 + .02150 = 2.02150 inches. Our next step would be computed in the same way by noting on the 3-inch line the correction for ½ inch and adding it to the approximated diameter of our second step, giving us an exact diameter of 2.500 + .00854 = 2.50854. Thus our tool to produce the piece shown in the example would have three steps of 2.0215, 3.000 and 2.50854 inches respectively if it is to have its cutting face ¼ inch below center. All diameters are computed in this way, from the largest or fixed diameter of the tool.

In conclusion, the writer would call the reader's attention to the formed tool, illustrated in Fig. 9, which is made in sections so that all diameters, sides and angles can be easily ground after the tool is hardened. This design is of especial value when such tools are made from high speed steel, as the finished surfaces are likely to be roughened by the high heat that is necessary for hardening.

* * *

COMPRESSED AIR AS AN INSULATOR.

The transmission of electrical power economically over long distances is limited only by the permissible voltage and cross-section of the conductor, and the insulation. Leaving out consideration of the leakage at the insulators, the voltage is inversely proportional to the cross-section of the conductor for the same efficiency of transmission. That is, given two power transmission lines of equal length, one working at 50,000 volts and the other at 5,000 volts, the cross-section of the 5,000-volt line must be ten times the area of that of the 50,000-volt line in order to work at the same efficiency. But copper costs money, and on a long-distance line, large section conductors are prohibitive. Hence the general use of high voltage. Unfortunately 60,000 to 100,000 volts is about the limit of high-voltage transmission, and these extreme figures are possible only where the atmospheric conditions are favorable. Were a 1,000,000-volt transmission line possible and practicable, the driving of the wheels of New York City by the power of Niagara Falls would be an assured fact. In an article, "Some Problems in Electrical Engineering," by Mr. Harris J. Ryan, which appeared in the April issue of the *Sibley Journal*, the author referred to this limiting condition of long-distance power transmission, but showed that while air at atmospheric pressure acts as an insulator up to a certain voltage limit, this voltage limit increases with air pressure, the increase being almost directly proportional to the increase of pressure up to about 125 pounds per square inch. At 150 pounds pressure, air has *ten times* the insulating strength of that at atmospheric pressure. While this fact could scarcely be expected to affect the future of long-distance transmission out-

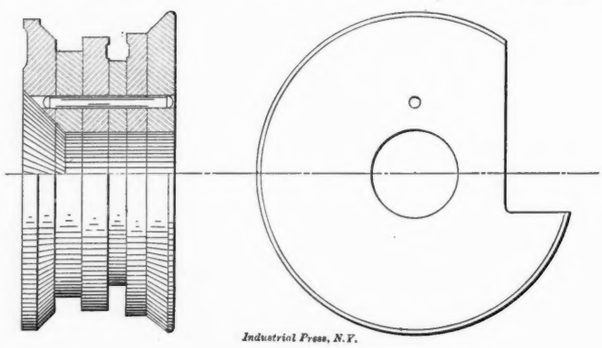

Fig. 9.

side the power house, it is pointed out that it may be of considerable value in the construction of high-voltage apparatus. Thus the static transformer would be a fair field. The oil-insulated transformer is a serious fire risk and is expensive. The use of compressed air would obviate the fire risk and give equal or better insulation at moderate pressures. Cooling could be effected by circulating the compressed air over water pipes, etc.

* * *

Some one has defined engineering as applied common sense, and an engineer as a person who, for one dollar, can do what any man can do with two dollars.

TOOL MAKING.—7.

SCREW THREADING DIES.

E. R. MARKHAM.

Machine screws and bolts are ordinarily threaded by means of dies. To distinguish this form of die from the various other forms in use, they are termed screw threading dies. Names are also given to the various styles of screw threading dies, to distinguish them from one another. These names denote the form, or some characteristic of the die. Square dies are so named because they are square in shape, Fig. 1, and are commonly used for threading bolts and pipe, but the dies for bolts are made differently from those used for threading pipe. Round dies, sometimes termed "button" dies,

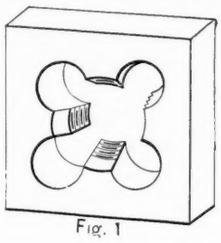

Fig. 1

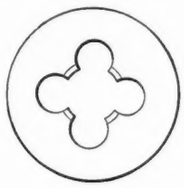

Fig 2

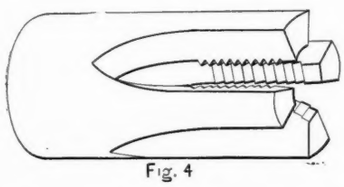

Fig. 4

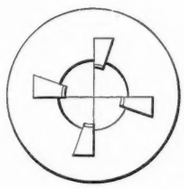

Fig 3

Industrial Press, N. Y.

Fig. 2, are made solid and adjustable. The solid die is used where exactness of size is not essential or for roughing a thread which is to be finished with an adjustable die. Adjustable dies, as their name denotes, are adjustable, and their size can be altered to compensate for wear, or for any desired alteration in size of screw being threaded. In the inserted blade dies, Fig. 3, the cutting edges are blades which are inserted in the body of the die. Spring dies, or hollow mill dies as they are called in some shops, are shown in Fig. 4. Self-opening dies are used when cutting long threads. When the die has cut a screw the desired length, the cutting edges recede from the work, obviating the necessity of backing off the die. Thus for work on long screws valuable time is saved, and the tendency of the die to alter the shape of the thread when backing off is done away with.

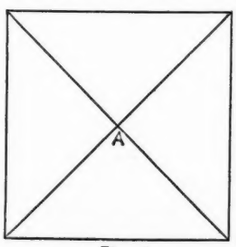

Fig. 6

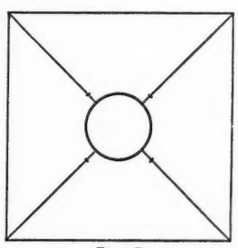

Fig. 7

Industrial Press, N.Y.

There are many forms of this die, and to attempt a description of all of them would be out of the question; we will consider one of the simplest. This form, however, is not claimed to be the most satisfactory when in use, but some dies on the market which give excellent results are made for the trade, in shops equipped with special tools which render it impossible with the ordinary machine shop equipment to make a die at anywhere near the figure they can be purchased for. While the self-opening die shown in Fig. 5 is not claimed as the best, it works very nicely, and is commendable because it can be made in the ordinary shop, by the ordinary man.

The cutting edges are located on the ends of two movable jaws, or sliding pieces; these are placed in a slot cut in the head. They are moved toward the center by means of inclined cuts in the ring, as shown. To open the die turn the ring to allow the end of sliding pieces to go into the deepest part of the inclined cut. A spring in each slide forces them against cut in ring. The ring *B* is made to fit on body *A*, which contains the slot to receive the movable jaws *C C*. These are kept in place by means of the plate *D*.

The length of the threaded portion of screw is governed by the location of the dog *E*, which is movable on and fastened to the plunger *F*. The dog projects through a slot to the hole in shank, making it possible for the screw to strike it, thus forcing the plunger out of hole in the adjustable ring *G*. This ring is adjustable on head ring *B* and is fastened to it by means of setscrew *H*, which adjustment is necessary in order to alter the cutting size of die. Plunger *F* is movable through collar *I*, which is securely fastened to the head by means of a pointed setscrew, as shown. A coil spring forces the plunger into the hole in the adjustable collar *G*, when it is turned to a position that insures the die cutting the correct size.

The movable pieces *C C* are moved toward the center by means of the inclined surfaces on inner side of ring *B*. When the plunger is forced out of the hole in collar *G* the springs acting on the sliding pieces *C C* force them against the inclined surfaces in outer ring causing it to turn, thus allowing the die to open.

The operations required for making this tool are similar to those described for other tools, so it does not seem necessary to go into detail, except in regard to the method of machining the inclined surfaces on inner portion of ring. The outer face of ring is colored with blue vitriol solution lines laid out showing the location of the desired surfaces, which may be machined by several different methods. The particular method depends on the facilities at hand. A hole is drilled at the deepest portion of the incline. The ring is

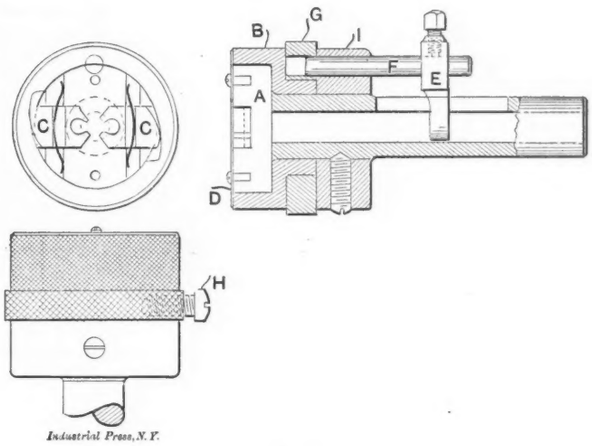

Industrial Press, N. Y.

Fig. 5

fastened to the faceplate of the lathe in the proper position to insure the desired location of the proposed surface. Now by means of the proper tool the necessary stock may be removed. It will be necessary to turn the lathe spindle by hand and only far enough to allow the tool to pass into the drilled hole; or the ring may be held in the vise on the universal milling machine and then by means of a small cutter the stock may be removed. It will be necessary to follow the lines by means of the various hand feeds of the machine. If the machine has a vertical spindle milling attachment it will be found much easier to follow the lines than if the cutter is held in the horizontal spindle. If milling machine has a rotary milling attachment the ring can be located so the cutter will follow the lines without operating the longitudinal or cross feeds. The cutting could also be done in a profiling or a die sinking machine.

Square Die. This form of die is generally used in machine shops for threading bolts, and for this purpose is placed in a bolt cutter. When making square dies the blank is planed to size and thickness, which must correspond to the size of opening in the holder which receives the die. The center of the face is found by scribing lines from opposite corners, as shown

in Fig. 6, the center being where the lines intersect. Before scribing these lines, however, the face of the die should be colored in order that any lines made on it may be readily seen. This may be done by applying the blue vitriol solution, or the blank may be heated sufficiently to show a distinct straw color or blue. Having scribed the lines from opposite corners, prick-punch the face where the lines intersect. Before drilling and tapping the die lay out and prick-punch for the clearance holes. It is necessary to have clearance holes in order to provide cutting edges; and they also serve as receptacles for the chips removed when the die is cutting.

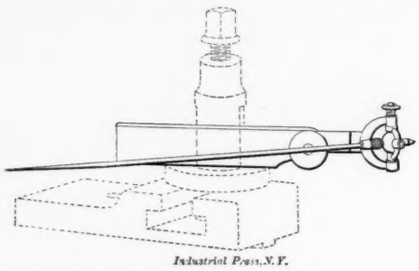

Fig. 8.

The distance of the centers of the clearance holes from the center of the die must be in accordance with the practice in the shop where the work is done. In some shops it is the rule to have the center one-half the diameter of the screw to be cut distant from the center of the die. If this rule is followed the clearance holes are too small to allow a reasonable amount of chips to be retained without so filling the holes as to tear the tops of the thread being cut. Then again it is necessary to lay out the clearance holes on the back of the die after the thread has been cut, and the hole filled with a screw which fits *tightly* in the threaded hole. Generally speaking, it is advisable to lay out the clearance holes further from the center than the distance mentioned, and therefore it is practical to lay them off after finding the center. A circle may be

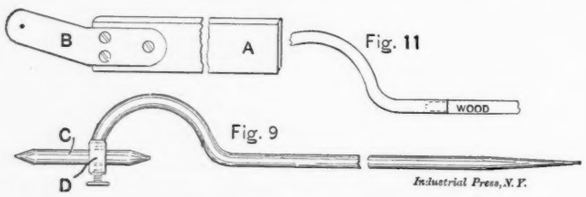

scribed the proper distance from the center of the die and where it intersects the lines drawn across corners we may prick-punch for centers of clearance holes. Experience has convinced the writer that best results are obtained if the outline of the die is laid out on a piece of sheet steel whose surface is colored either with the solution—blue stone—referred to, or by heat. Many toolmakers prefer using a piece of sheet brass, or zinc, for this purpose. After scribing the hole in center of die we can lay out the clearance holes, making the lines light until we have them located right, as shown in Fig. 7.

When ready to drill and thread the die the blank may be clamped to the faceplate of the lathe, truing it by means of the center indicator, shown in Fig. 8. The indicator plays

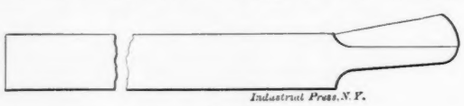

Fig. 10.

such an important part in the production of accurate work that it seems wise to give a brief description of it, and of some of the uses to which it may be put.

Indicators may be purchased which give excellent satisfaction; but the young mechanic very often prefers, as far as possible, making such tools as he can, and he certainly takes greater pride in the product of his skill than in anything he can buy, even should the material bought and the time lost amount to more than the cost of a tool he may buy. An excellent indicator and one that is easily made is illustrated in Fig. 9. This consists essentially of a shank, which may be made of a size of steel that readily enters the toolpost slot of any lathe likely to be used. If tool steel of the proper size can be easily obtained, and no machine steel can be procured that does not need machining, it will be cheapest to use the tool steel; but machine steel answers the purpose as well, and is much cheaper, when the right size can be had.

If a surface grinder is at hand the surfaces of the shank *A* may be ground square with each other. When stock larger than the desired size is used it may be milled, or planed to size. If it is planed the surfaces are finished very smooth by using a finishing tool like that in Fig. 10, which if made and ground properly cuts very smoothly. It must, however, only remove a very small amount of stock, and it works best if the surface being machined is well covered with oil.

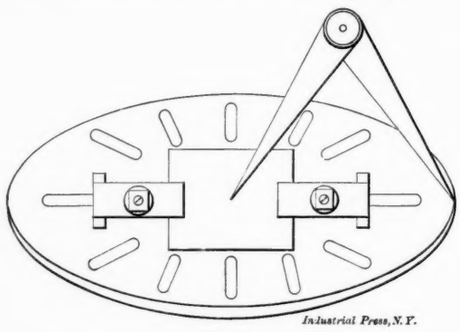

Fig. 12.

If stock of the desired size is used and there is no grinder, the surfaces may be finished square and flat by draw-filing, after which the spring *B*, Fig. 9, is made from sheet steel. Either tool steel or spring sheet steel must be used so that it may be spring-tempered to furnish sufficient tension to keep the end of pointer in the prick-punch mark in work being trued. The spring may be shaped, as shown, or given any desired shape, according to individual taste. Then the prick-punch mark is made near the small end, as shown, and it is drilled onto the shank. Next it is hardened and given a spring temper, after which it may be polished and drawn to a full blue color, if desired. If the tool is of machinery steel the shank may be casehardened, after the name has been stamped upon it. If casehardened its appearance will be enhanced by doing the work in such manner as will produce colors.

The indicating wire may be made in three pieces. The

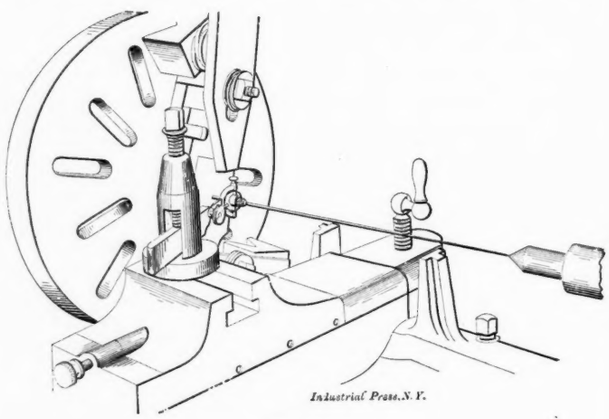

Fig. 13.

short straight piece *C* is pointed to an angle of 60 degrees on each end, one end entering the prick-punch mark in the work to be tested, while the other enters the depression in the spring portion of shank. The connection *D* is drilled and threaded to receive the long wire, as shown, while on the opposite end it is drilled and threaded to take a knurled headed setscrew. At right angles to these holes another hole is drilled to receive the short wire *C*. The long wire is bent in shape of a half circle, and the extreme end is pointed, as in this condition a slight movement of the wire is more easily noticed. There are other styles of indicators

which require more skill in their manufacture than the one described, but this will answer for the general run of work.

If an extremely long indicating wire is needed in order to detect slight errors of location, as in drill jig, model and gage work it is necessary to make the indicator portion of wood, as a steel wire would be affected by the tremor of the machine resulting from the slight vibration of the floor noticed in all machine shops. In such cases the *wire* may be made short, as shown in Fig. 11, a hole drilled in the end and a wood extension fitted, as shown.

The die blank should be securely fastened to the lathe faceplate by means of straps and bolts. It may be located so the center of the blank is approximately central with the faceplate by means of a large pair of dividers, Fig. 12. Screw faceplate on the lathe spindle, then adjust the blank until the center—prick-punch mark—is exactly central, by rapping, testing it for truth with the indicator. To make sure of the hole being true with the surface of the blank clamped against

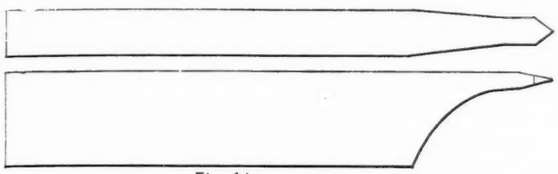

Fig. 14

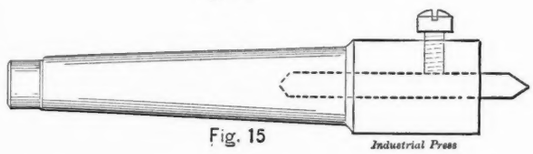

Fig. 15 *Industrial Press*

the faceplate, be sure that the faceplate runs true when it is screwed on the lathe spindle. There should be no dirt or chips in the thread or on the shoulder of either the faceplate or lathe spindle. Now screw the faceplate on spindle and test the face. Should it run out of true remove it from spindle and look again for dirt, and if none be found, screw it on spindle and *true* the face.

For clamping work to faceplate use straps and bolts whose weight is as nearly alike as possible. The work in question being small the straps would be near the center of faceplate, so a slight difference in weight would make no material difference; but these explanations of various methods are intended to cover, so far as possible, similar operations on other classes of work, to which the above would apply.

Should the work be large and have one heavy and one light side, opposite each other, or were it necessary to use more straps on one side than the other, then of course one side would be heavier than the other. In such cases add weight to the faceplate on the side corresponding to the light side of work, to make the two sides balance. This weight is known as a "counterbalance." Unless work of this class is counterbalanced it will be impossible to machine surfaces true, or turn the projections, or bore holes that will be round.

When work is strapped to the faceplate, screw the faceplate onto the spindle and true the work, testing with the indicator, as shown in Fig. 13. The work should be moved on the faceplate until the extreme point of long end of indicator wire remains fixed, when the work is revolved. Do not run the lathe spindle by power; throw the belt off the cone and revolve the work by hand. The belt is not equally flexible in all parts, and the portion where the belt is laced together, with other causes, would bring an unequal action on the spindle bearings and cause the indicator wire to move when it should not, thus deceiving the operator.

As stated, the *center* of the die should be prick-punched. Use the *prick-punch*, not the center punch for this purpose. The prick-punch should have its point ground at an angle of 60 degrees and should be ground in some machine where it can be held in a chuck or collet to insure the point being *perfectly round*. If the point is not round the mark it makes will not be round, and when the indicator point is inserted in it and the piece revolved, the point of wire may be affected by the untruth of the depression and move somewhat. This slight movement at this end would be greatly magnified at the indicator end and deceive the workman. This is especially true if the end of wire—point—which enters the prick-punch mark is not exactly round; so, to avoid any liability of error, both the prick-punch and the point of wire should be ground as above described.

When the work has been strongly fastened to the lathe faceplate and it runs true, we can proceed to drill and bore the hole to tapping size. Some toolmakers are very careless when drilling the first hole through work that is to be bored, claiming that if the drilled hole runs out of true somewhat it can be brought true with the boring tool. I think this a mistake; nothing should be done wrong that can be prevented by reasonable care, simply because it can be made right by after operations. Most tool room lathes are provided with centering tools, made purposely for finding the center of work to be drilled, or for making a depression to receive the point of the drill, thus insuring its running true when cutting. Sometimes these are made on the end of a piece of stock to be held in the toolpost, as shown in Fig. 14, while at other times a collet is made which fits the tail spindle of lathe, the end of collet projecting far enough beyond the end of spindle to allow of a setscrew to hold a drill inserted in end of collet, as shown in Fig. 15. This drill projects but a trifle beyond the end of collet, is therefore very rigid and cannot run; consequently it centers the work very true.

As a twist drill gives best results when its cutting edges are ground at an angle of 59 degrees with the sides, as shown in Fig. 16, care must be exercised in regard to the centering drill; if that is ground at the angle mentioned the point must be very thin, or a flat portion will be the result at bottom of the centering. The amount of flat will of course correspond with the width of point of drill. Now if the flat portion produced in the bottom of the centering is greater than the width of the point of drill to be used in drilling, then the drill will probably run out of true. Some toolmakers grind the centering drill at a greater angle than the drill used to drill the hole, while others grind it at the same angle and "wheel out" the flute at the end of the drill, thus making the point very thin—thinner in fact than the point of the drill to follow it. This is largely a matter of opinion; I think the latter method the safer unless the cutting end of the drill is steadied when it first starts cutting.

After drilling the hole, use a boring (inside turning) tool to bring it to the correct size for threading, unless a reamer is at hand which will produce a hole tap size. If many dies of a size are to be made it is advisable to have a reamer. In

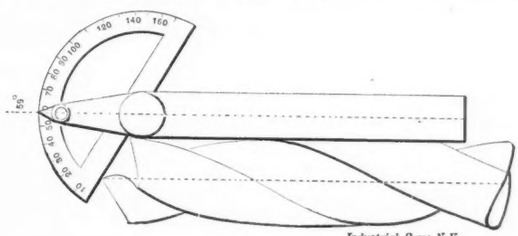

Industrial Press, N. Y.

Fig. 16.

fact, where several dies of a size are to be made or where dies are made occasionally it is best to keep a set of tools especially for the purpose. The necessary tools would of course depend on the size and character of the die, but for most dies would consist of a drill, and if the die were sufficiently large a boring tool, a reamer, taper reamer (countersink) and taps.

It is perhaps well to state at this time that a screw thread die is *always* designated by the size of screw it is to cut, and not by the diameter of the piece containing the die. It is therefore readily apparent that a ½-inch die may be 1¼ inch outside measurement, or it may be 2 inches. But while it is customary to make dies of a size that will fit holders at hand, yet there are certain dimensions which govern in a measure the outside dimensions and the thickness. The outside diameter should not be made much less than 2½ times the diameter of the screw to be cut; that is a ½-inch die should be at least 1¼ inches outside diameter, and the thickness of the die, Fig. 17, may be 1¼ times the diameter of screw to be cut.

Should it be necessary in order to use holders at hand to make the die thicker than amount mentioned, it may be cut away, as shown at Fig. 18.

It is not expected that the reader will attempt to follow to the letter the instructions just given, as it would be necessary to make a holder for each different size of die. Quite a range of sizes may be made to the same dimensions to fit the same holder. The dimensions are given to furnish the reader an idea of the approximate sizes generally accepted, and apply more particularly to round dies, as square dies are made of a size that corresponds to the opening in the holder of the machine in which they are used.

When but one die of a size is to be made, and there is no tap of the proper size at hand, it is advisable, if the opening in die is sufficiently large, to cut the thread with an internal threading tool. Gage the size by a male gage, if one is to be had; if not, use a screw that is correct as to diameter and pitch.

Where there is but *one* tap, it is considered good practice to cut the thread nearly to size with an internal threading tool, then to finish to size with the tap. Do not, however, cut the thread too near finish size with the threading tool, as any variation in pitch of the thread of leadscrew and of the tap, occasioned by the tap changing in hardening, would cause the

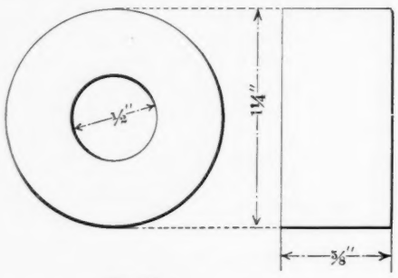

Fig. 17.

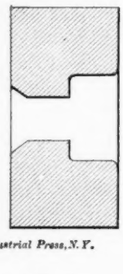

Fig. 18.

thread to be imperfect at the back end of die. For the same reason—alteration of lead when hardened—it is advisable to leave a sufficient difference in sizes of taps used (if there are several) so that the larger tap will cut a sufficient amount to make a perfect thread.

In the making of taps for threading dies and similar work, the mistake is sometimes made of cutting all the threads of the various taps to the same diameter, and then the tops of the threads of the first tap are cut away, as in No. 1, Fig. 19, the tops of the threads of No. 2 not cut away as much, while No. 3 is left full size. Now it is apparent that any change in lead of the various taps *must* manifest itself in the tapped hole, which, in the case of a die, or similar tool, would be fatal. It may appear to some that more space has been given to the consideration of the liability of change of lead than is necessary, but years of experience have convinced the writer that it is all important, and at the same time not understood by every one.

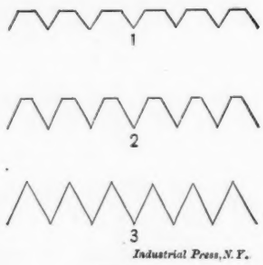

Fig. 19.

In order that the die may cut it is necessary to chamfer the threaded hole back for a distance of three or four threads, according to the pitch of the thread—a thread of fine pitch not requiring as much as one of a coarser pitch. Do not use a taper reamer that will make the chamfer at the surface of die much greater than the size of die when it has cut the desired depth.

In shops where they make the clearance holes one-half the size of the die, and where they have centers of the clearance holes at the intersection of a circle whose diameter is equal to the diameter of the screw to be cut, and the four equidistant spaced lines crossing the center, as shown in Fig. 7, it is necessary in order to lay out a circle of the size mentioned after the die has been drilled and threaded, and also be able to drill the clearance holes without the use of a drill jig, to turn a screw into the threaded hole and face it off flush with the die. The writer's experience, however, is not of a nature that allows him to look with favor on clearance holes of the

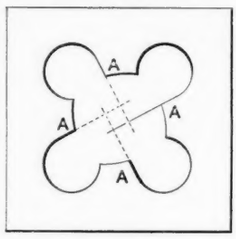

Fig. 20.

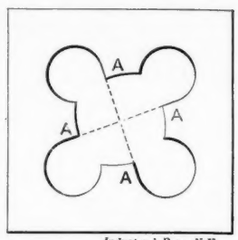

Fig. 21.

size mentioned; the holes being small quickly fill with chips which tear the threads of the screw being cut, thus producing an unsatisfactory screw. Make clearance holes large enough to allow the chips to enter the holes easily, and also to allow chips to be removed by the stream of oil which runs on the wire being threaded, to cool the die and lubricate the cutting edges.

After laying off the clearance holes, and prick-punching for center, a small hole is drilled to accommodate a counterbore whose body is the desired size of the clearance holes. Next, the holes are counterbored to size, the faces of the cutting edges filed smooth, the back of the land filed to make the land of the proper width, and the chamfered portion also filed for clearance.

When filing the *face* of the cutting edge it may be necessary to somewhat alter the location of the face, it being considered good practice to make them radial for such work as ordinarily comes to hand in a machine shop. When they are to be used wholly for threading cast brass, and the various other alloys of copper, some toolmakers give the faces a *negative rake*—that is, cut back of center—as shown in Fig. 20; while others claim best results on all classes of work if the faces are made radial—on line with the centers, Fig. 21. The back of the land is filed to remove any burrs thrown between the threads by the counterbore when making the clearance holes, and to make it proper width, as a land that is too wide has too great an amount of bearing on the screw being cut, while a land that is too narrow will chatter and produce an imperfect thread. It is customary to give dies having four cutting edges a thickness of land at portion marked *A*, Fig. 21, a width equal to from 1-20 to 1-16 the circumference of the screw to be cut. Use the utmost care when filing the chamfered cutting edges for clearance, as it is right here that many make the mistake of thinking the only thing necessary is to file off a little more stock at the heel than at the cutting edge. In reality no stock should be removed from the cutting edge. Commence filing at the heel of land and gradually go toward the cutting edge, just bringing this to an edge and being sure nothing is taken from the edge. If a greater amount is removed from one cutting edge than from another the shorter land will not cut, and its share of work must be done by the next cutting edge which has, in addition to this, its own work to do; and no one cutting edge can do the work of two and produce a smooth thread.

In our next article we will conclude the subject of dies and take up round dies, spring dies and dies with inserted blades.

* * *

The "slip" of pumping engines due to leakage past the pistons and valves, is commonly as much as five per cent. where the inside packed plunger is used, and frequently is much more. A test of a small pumping engine forming part of the Brooklyn water supply system, showed the slip to be twenty-two per cent. of the plunger displacement. That is, for every 100 strokes of the plunger, 22 strokes were wasted by the leakage. With the outside packed plunger the leakage is practically reduced to that due to defective valves.

SPINDLE CONSTRUCTION.—1.

MODERN METHODS, DISCUSSED IN DETAIL.

HOWARD P. FAIRFIELD.

The spindles used in boring mills, drill presses, milling machines and lathes are usually fitted with a threaded nose, and a tapered hole to hold a collet, an arbor, or a pointed center. Milling machine and lathe spindles are also made with a hole throughout their entire length in addition to the other features. This hole is a convenience in many ways, as it is possible to pass stock through the hole to be operated upon. In the flat turret lathe and in the different makes of screw machines this is the principal method of feeding stock to the several tools held in the turret of the machine.

The spindles of the above-mentioned machines are either made from a good bar of machinery or 20-point carbon steel, or they are made from crucible steel forgings of about 50-point carbon, and are commonly spoken of as hammered crucible steel spindles. High carbon or tool steel is used at times for spindle work, but this can be classed as special spindle work and its use is rare. The requirements of spindle construction are that the spindle be perfectly straight, that the journals be round, straight, and true running, that the nose be threaded to run true with the journals, and that the tapered center

Fig. 1.

Fig. 2.

hole also run perfectly true with the journals. The spindles in any of the first-class machines are constructed to fulfill all these requirements to a remarkable degree. Several makers, for example, test the truth of the tapered hole with a test bar of at least one foot in length and allow a vibration of less than 1-1000 of an inch from truth at the outer end of this test bar,

Fig. 3.

when soldering insures keeping the flutes cool beyond the part so held and the hardness of the cutting parts is not disturbed. In deep drilling with this tool it is necessary to withdraw the drill as often as the flutes are filled with chips, to allow of their removal and also to lubricate the cutting edges. As this is time consuming, when many spindles are to be drilled in a severe test when one considers that these are not special machines but are their regular commercial products.

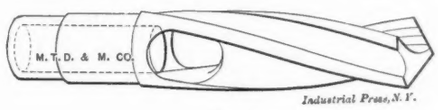

Fig. 4.

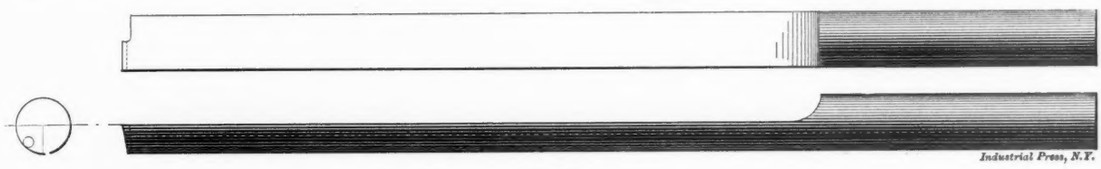

Fig. 5.

The producing of holes throughout the length of spindles and shafts has led to the devising of machines and appliances for deep drilling that are peculiar to such work. To commercially drill spindles at a profit requires that the maximum feed be maintained. It is a matter largely of furnishing a free cutting tool, amply lubricated and cooled, and keeping the hole free from the cuttings or chips. No method that does not fulfill the above conditions can be said to be a complete success. Where, however, but few spindles are to be drilled, and when the number does not warrant the purchase or construction of special spindle drilling machinery, the engine lathe or a drill press can be used to do the work. Owing, however, to the difficulty of keeping the hole freed from chips when the work is held vertical, the lathe is the more used tool or machine for this drilling job. The drills used in deep drilling of this sort are the ordinary twist drill, Fig. 1, the oil tube twist drill, Fig. 2, the straight flute or "Farmer" drill, Fig. 3, the half round drill or hog nose drill, Fig. 5, and the special hollow drill, shown in Fig. 4. This last drill is used in a special drilling machine as a rule and not in ordinary lathe drilling.

Where only a few spindles or shafts are to be drilled the common twist drill, shown in Fig. 1, or the straight fluted drill, shown in Fig. 3, are used. As they are ordinarily made of much shorter lengths than the hole to be drilled is likely to be, some means must be used to lengthen them sufficiently to allow of the reach desired. This can be accomplished by first turning the shank end of the drill below size. The stem or shaft to lengthen the drill can be a piece of cold rolled steel of the same diameter as the drill. A hole is made in one end of this stem of a size that will closely fit the reduced shank of the drill. The turned down shank of the drill is then "tinned" with solder and some of the soldering acid is dropped into the hole in the stem. To put the two parts together grasp the drill next to the reduced end with a pair of gas pliers, and by holding the tinned end of the drill and the drilled end of the stem in a Bunsen flame, they can, when heated sufficiently to make the solder run, be forced together. When cool they will be capable of withstanding lots of work. This process is termed in the shop "sweating in" a drill or "sweating" two surfaces together. Where the hole to be drilled is of such a depth relative to its diameter as to make the length of shaft or stem so great that it will be too slender to use when the hole is first started, several stems of varying lengths may be provided. The process of sweating on these stems is so simple that one stem when used to its depth can be unsoldered and another and longer one sweated into its place. The holding of the drill in a hand vise or pipe pliers when soldering insures keeping the flutes cool beyond the part so held and the hardness of the cutting parts is not disturbed. In deep drilling with this tool it is necessary to withdraw the drill as often as the flutes are filled with chips, to allow of their removal and also to lubricate the cutting edges. As this is time consuming, when many spindles are to be drilled in the lathe, the oil tube drills shown in Fig. 2 are better for the purpose. The oil tubes are joined at the rear end or shank of the drill and are covered by some form of hollow bushing. This bushing is tapped upon its circumference to take a short piece of gas pipe. A hose connection between this short piece of gas pipe and the oil pump allows the oil to be forced through the oil tubes to the cutting lips. To allow the chips and oil to force out, two straight grooves are milled on opposite sides of the stem or shaft and connecting with the helical or twisted flutes. To break up the chips and insure their being forced out by the oil, notches or steps are ground in the cutting lips of the drill. These notches must always be of a greater depth than the distance the drill advances per revolution. If the drill is sharpened upon a drill grinding machine each lip will cut evenly, and chips should come away evenly from each cutting edge. Drill grinders, however, are designed to leave the end of the drill of such a form as will allow it to just clear the bottom of the hole being drilled. As the oil tubes end in this surface the oil is prevented by this small clearance from flowing to the full capacity of the tubes, and it is necessary to grind the back edge of the flute off squarely up to the end of the oil tube. This weakens the cutting edge somewhat, but does not do so to an extent worth considering and does allow of a free flow of oil. The half round or hog nose drill shown in Fig. 5 can be used in either the engine lathe for drilling or in a special drilling

machine designed for drilling spindles. It is usually used, in fact, in the special drilling machines of one company the writer knows of, for all holes under one and one-quarter inches. In its smaller sizes the hog nose drill is usually made of tool steel and the cutting end cleared and hardened the same as a lathe tool. In the larger sizes the drill is made of machinery steel and a tool steel cutting die is fitted to the leading end. The edge of this drill is also notched to break up the chips as in the drills spoken of above. This drill, when correctly made, ground and started will, if well lubricated, leave as round, true, and finished a hole as any drill that is made.

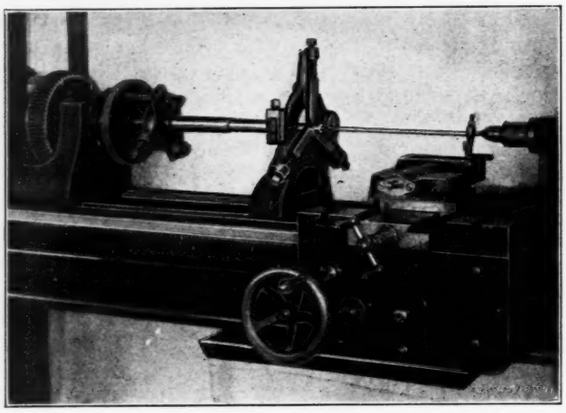

Fig. 6. Lathe Set up for Spindle Drilling.

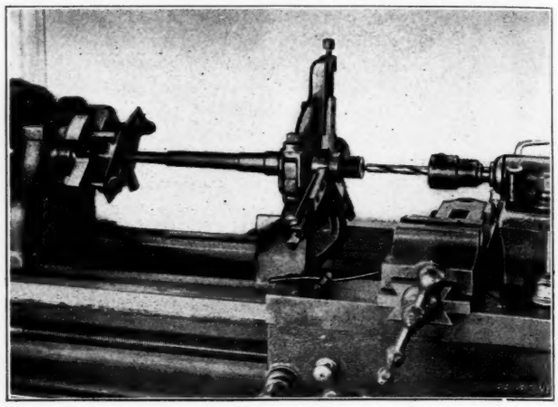

Fig. 7. Drilling for the Taper Hole.

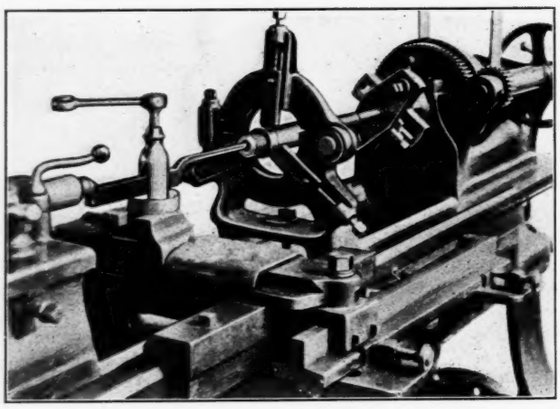

Fig. 8. Boring the Taper Hole.

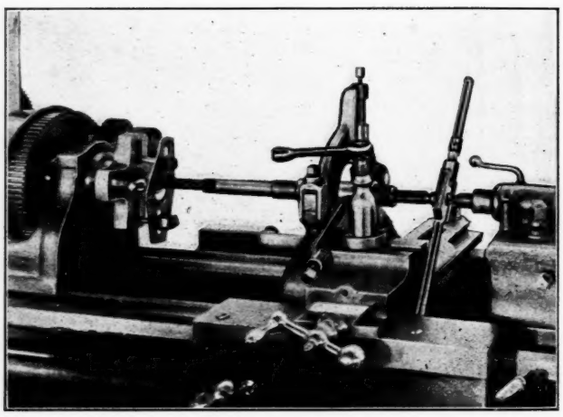

Fig. 9. Reaming the Taper Hole.

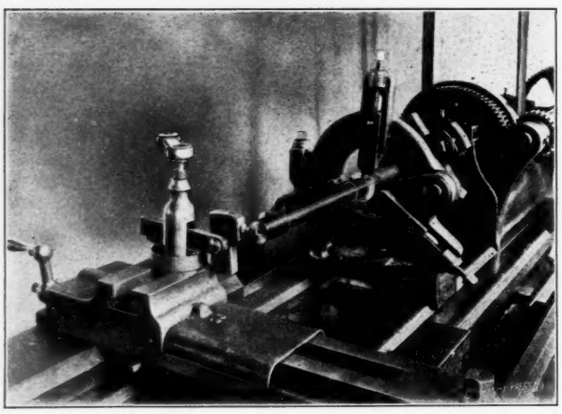

Fig. 10. Use of Test Bar and Indicator.

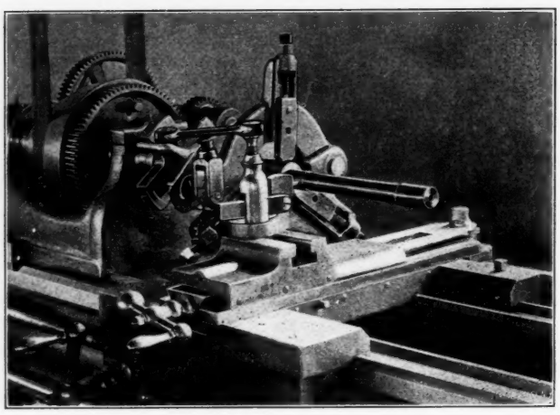

Fig. 11. Testing at the Inner End of Bar.

In Fig. 7 is shown an engine lathe set up for drilling the lengthwise hole in a spindle. In this case as the spindle is rather slender and liable to spring while it is being worked upon, the tapered center hole is made the last operation in the construction, the bearings being ground just previous. This order should always be followed for slender spindles to insure the truth of the tapered hole with relation to the bearings. The spindle is first roughed to a finishing allowance and short bearings are turned upon the ends to an exact degree of roundness for center rest support. The larger end or nose of the spindle is placed upon the live center, which is supposed to be trued up nicely, and is held in place on the center by a "hold back," as shown. The smaller or what will finally be the back end is run in a center rest and is drilled into a short distance with a drill somewhat smaller in diameter than the drill to be finally used. An inside boring tool held in the lathe toolpost is then used to enlarge the small hole to a size that will allow the drill it is intended to use to just slip in without shaking. The drill is in this manner started in its cut perfectly concentric with the center line of the work. Drills sweated into shanks or stems of varying lengths are used to drill the hole to a depth sufficient to meet the tapered center hole when it is machined. This leaves the center hole in the faceplate end of the spindle untouched until all opera-

tions are finished. Before removing the spindle from the center rest the edges of the hole are chamfered to an angle of 60 degrees and to a sufficiently broad surface to form a bearing for the centers when finishing and grinding. If the spindle is stiff enough to warrant finishing the tapered centered hole before grinding and finishing the spindle, it must

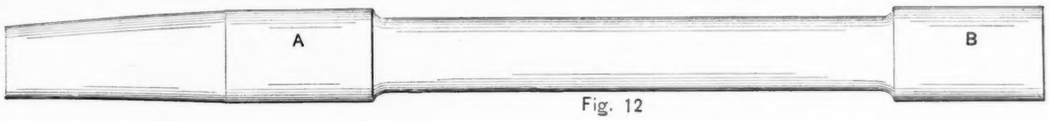

Fig. 12

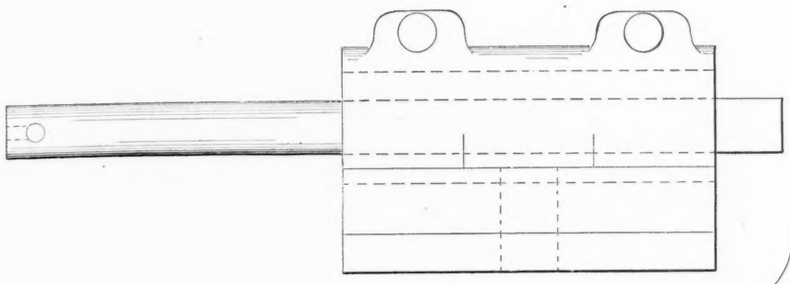
Fig. 13

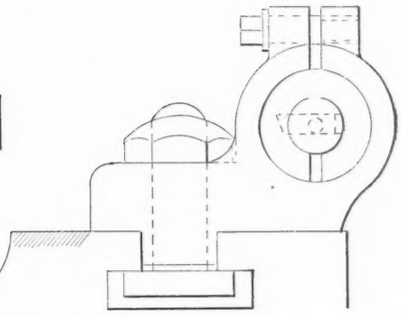

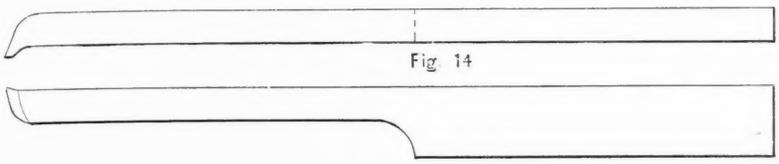
Fig. 14

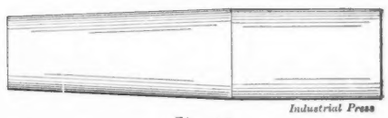

Fig. 15

be held with the small end trued up in a chuck instead of on the live center. This brings the work in the reverse of the position shown. The nose is held in the center rest, a true running bearing having been turned where it is to bear in the center rest. As said before, the spindle is roughed to a finishing size before drilling. The hole is then started true and is drilled as before. If the hole is large enough, however, and the spindle stiff enough, the hole may be drilled by using some of the oil tube drills mentioned above.

tapered surface and at the diameters *A* and *B*. Its length outside the tapered part may vary from seven inches to fifteen inches, and it must be known to be a perfect job and a standard. To use this bar the tapered hole is carefully wiped out, that no chips or oil be present. The bar is then inserted and pressed home with a slightly twisting pressure. A Bath indicator can then be held in the toolpost of the lathe with its feeling point touching the test bar as in Fig. 10. The work is rotated at a medium speed and the bar is tried at both *A* and *B*. If the error shown by the indicator is greater than the limit set for the job a light cut with the boring tool and another light reaming may be necessary. If, however, the hole is only slightly out of truth the high side of the hole can be marked and a light scraping with the finishing reamer upon that side will true it up. Not much stock must be removed in this way as the result of scraping upon one diameter is to make the hole oblong instead of round. When the hole has been bored and reamed very carefully the bar will not usually run out on the first trial more than .001 inch in 10 inches and a touch of scraping will put this error right. The inside boring tool shown held in the toolpost in Fig. 8 is the common forged tool and its usual form is shown in Fig. 14. Where shallow holes are to be turned out this is a good tool and is cheaply made. The tool and holder shown in Fig. 13 is, however, a better form when much work is to be done. The bar that holds the tool can be revolved to bring the tool point into any desired relation to the hole. By the use of suitable bushings, bars of any diameter may be used and the length of bar can be easily suited to the length of

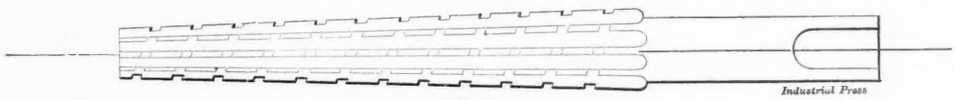

Fig. 16.

Fig. 7 shows the spindle mounted ready to have the tapered center hole machined. The drill used to rough the hole is slightly smaller in diameter than the finished hole is to be in smallest part. After the hole is drilled a roughing reamer like the one shown in Fig. 16 is used to fully rough out the hole and leaves the hole of an approximate size and taper. To true the hole to perfect concentricity it is bored out with an inside boring tool held in the lathe toolpost, as in Fig. 8. A

Fig. 17.

lathe having either a compound toolpost or a taper attachment must be used for this job. The first setting of the taper will scarcely be more than an approximation, and alterations must be made after each cut until the tapered hole is like the standard used. A plug, as shown in Fig. 15, may be provided as a standard, or the finishing reamer, Fig. 17, may be used to try the taper with. Fig. 8 is a back view of the lathe and shows the taper attachment coupled up to bore the tapered center hole. The hole is bored in this manner to the right diameter and finished smooth by scraping a few thousandths out with the finishing reamer held as shown in Fig. 9. If all the operations have been carefully carried out the hole will be true when tested with the test bar shown in Fig. 12. This test bar is of tool steel hardened and ground upon the

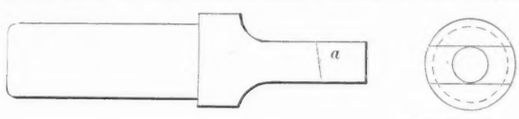

Fig. 18.

hole it may be used upon. This holder takes several shapes or forms in different shops and is well worth its cost. When large holes are to be started in the end of the spindle a small drill may be used to drill a shallow hole. The shallow hole can then be turned concentric with an inside boring tool, as stated above, and finally enlarged to the diameter of the drill to be used, by counterboring with the tool shown in Fig. 18.

The "tit" or leader (*a*) is a nice fit in the smaller concentric hole and leads the cutting edges straight with the center line. A depth sufficient to admit the sizing drill beyond its cutting edges is all that needs to be made with the counterbore.

Taper reamers have a tendency to draw into the work when in use. To counteract the drawing-in action it is common practice to cut a left-hand helix upon the reamer. Finishing reamers are, however, seldom treated in this manner, as their use is to just scrape the hole to a perfect surface. A left-hand helix is undoubtedly a help when using the roughing reamer. There are several errors that one is apt to make in finishing a tapered hole in a spindle. 1. If the spindle is slender

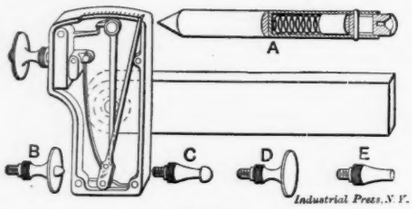

Fig. 19.

care must be taken that the hold-back or clamp does not spring the work by being tightened up too hard. Anything more than enough to hold the work upon the center is too much. 2. In turning the hole out with the boring tool set the cutting point upon the center line of the lathe to get straight sides to the tapered hole. 3. Be sure that the center line of the work and the live and dead centers are coincident with the center line of the lathe. Fig. 19 shows the interior of the Bath indicator and the several feeling points used. This is a very sensitive tool, a movement of 1-2000 inch of the feeling point moves the indicator finger a distance of 1-12 inch.

* * *

REAMER CLEARANCES.

FRED HOLZ.*

After constant experimenting for a period of more than one year, we have finally succeeded in establishing tables for four styles of reamers for obtaining the best possible clearances, the object being to grind clearances on reamers which would ream the greatest number of smooth holes with a minimum amount of wear. The four styles of reamers are as follows: Hand reamers for steel; hand reamers for cast iron and bronze; chucking reamers for cast iron and bronze; chucking reamers for steel. We use adjustable blade reamers almost exclusively, all of which are ground in the tool room. No one outside of the tool room is allowed to adjust the reamers in any way.

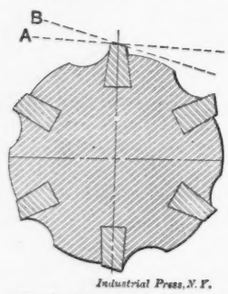

Fig. 1. Showing Reamer Clearances

When we began this series of experiments, a report was kept of every reamer as to what kind of clearance it had ground, and when it was returned to the tool room, it was accompanied by a report stating the number of holes it had reamed. The newly ground reamers were made to ream holes from ¼ of a thousandth to ½ of a thousandth above size, and were allowed to wear down to standard size when they had finished their performance. Various kinds of clearances were tried with varied results, until we reached a limit of reaming 1,070 holes with the same hand reamer before it showed any sign of needing regrinding or readjusting. These holes were ⅞ inch in diameter, 1 inch long, in parts made from shafting material known as "hub stock." These holes were from .001 to .002 inch under size before hand-reaming, and were perfectly smooth when finished.

When reaming cast iron or bronze, only two or three hundred pieces could be reamed, since the wear of the reamer on these materials is much greater than in steel, although could the error limits of the holes be greater, of course a larger number could be reamed before the reamer would need readjustment. In our practice we aim to have all the holes as near standard as possible, and the variation in the fits, such as for running and driving, is made in the shafts.

Fig. 1 shows a hand reamer. It will be noticed that there are two clearances ground on same, *A* and *B*. A small land of .025 inch wide is left on all hand reamers for cast iron and

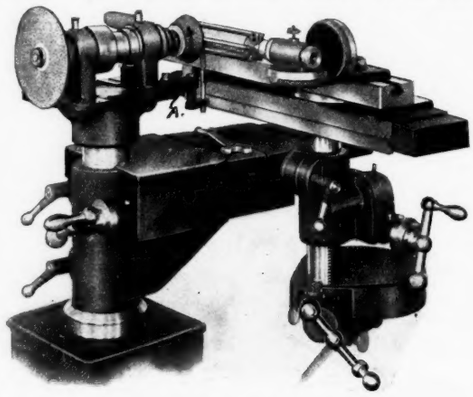

Fig. 2. Showing Stationary Tooth Rest; Grinding Clearances.

bronze; a land of only .005 inch is left on hand reamers for steel. Chucking reamers for cast iron or bronze have 23 degree beveled ends and are provided with two clearances along the blades (See Table 3). The beveled ends have only one clearance equaling the second clearance given in Table No. 3. Chucking reamers for reaming steel have the knives circular ground to exact size of hole to be reamed. The 45-

	*TABLE NO. 1.		*TABLE NO. 2.		*TABLE NO. 3.		†TABLE NO. 4.
	Hand Reamer for Steel. Cutting Clearance. Land .006" wide.		Hand Reamer for Cast Iron and Bronze. Cutting Clearance. Land .025" wide.		Chucking Reamer for Cast Iron and Bronze. Cutting Clearance. Land .025" wide.		Chucking Reamers for Steel, Circular Ground.
Size of Reamer.	For Cutting Clearance.	For Second Clearance.	For Cutting Clearance.	For Second Clearance.	For Cutting Clearance.	For Second Clearance.	For Cutting Clearance on Angle of End of Blade 45 Degrees.
½	.012	.052	.032	.072	.040	.080	.080
9/16	.012	.057	.032	.072	.040	.080	.080
⅝	.012	.062	.032	.072	.040	.090	.090
11/16	.012	.067	.035	.095	.040	.100	.100
¾	.012	.072	.035	.095	.040	.100	.100
13/16	.012	.077	.037	.095	.045	.125	.125
⅞	.012	.082	.040	.120	.045	.125	.125
15/16	.012	.087	.040	.120	.045	.125	.125
1	.012	.092	.040	.120	.045	.125	.125
1 1-16	.012	.097	.040	.120	.045	.125	.125
1 ⅛	.012	.102	.040	.120	.045	.125	.125
1 3/16	.012	.106	.042	.122	.045	.125	.125
1 ¼	.012	.112	.045	.145	.050	.160	.160
1 5/16	.012	.118	.045	.145	.050	.160	.160
1 ⅜	.012	.122	.045	.145	.050	.160	.175
1 7/16	.012	.127	.045	145	.055	.175	.175
1 ½	.012	.132	.048	.168	.055	.175	.175
1 9/16	.012	.137	.050	.170	.055	.175	.175
1 ⅝	.012	.142	.050	.170	.060	.200	.200
1 11/16	.012	.147	.050	.170	.060	.200	.200
1 ¾	.012	.152	.052	.192	.060	.200	.200
1 13/16	.012	.157	.052	.192	.060	.200	.200
1 ⅞	.012	.162	.056	.196	.060	.200	.200
1 15/16	.012	.167	.056	.196	.064	.200	.200
2	.012	.172	.056	.216	.064	.224	.225
2 1/16	.012	.172	.056	.216	.064	.224	.225
2 ⅛	.012	.172	.059	.219	.064	.224	.225
2 3/16	.012	.172	.059	.219	.064	.224	.225
2 ¼	.012	.172	.063	.223	.064	.224	.225
2 5/16	.012	.172	.063	.223	.064	.224	.225
2 ⅜	.012	.172	.063	.223	.068	.228	.230
2 7/16	.012	.172	.063	.223	.068	.228	.230
2 ½	.012	.172	.065	.225	.072	.232	.230
2 9/16	.012	.172	.065	.225	.072	.232	.230
2 5/8	.012	.172	.065	.225	.075	.235	.235
2 11/16	.012	.172	.065	.225	.075	.235	.235
2 ¾	.012	.172	.065	.225	.077	.237	.240
2 13/16	.012	.172	.065	.225	.077	.237	.240
2 ⅞	.012	.172	.070	.230	.080	.240	.240
2 15/16	.012	.172	.070	.230	.080	.240	.240
3	.012	.172	.072	.232	.080	.240	.240

† Mount tooth rest on table of machine.
* Mount tooth rest on emery wheel head.

* President Cincinnati Milling Machine Co.

degree beveled ends only have clearances. (See Table No. 4). On all reamers of this style the knives are ground from .015 to .020 inch below size half of their length, toward the shank end. In grinding the clearances for the various kinds of reamers as given in Tables No. 1, 2, and 3, the tooth rest is held stationary on the emery wheel head of the grinder, Fig. 2, while for the clearance for the 45-degree beveled ends on the chucking reamers for steel, the tooth rest is supported from the grinder table and travels with the work. (See Fig. 3.) We oil-stone our chucking reamers and hand reamers for cast iron and bronze, but not the hand reamers for steel. A micrometer is used for measuring over the blades for size. We use India oil stone, medium grade, and use gasoline instead of oil. The front end of all hand reamers is tapered about .005 inch in 1¼ inch. The back end of the blade is also slightly tapered, so as not to injure the hole in backing out the reamer.

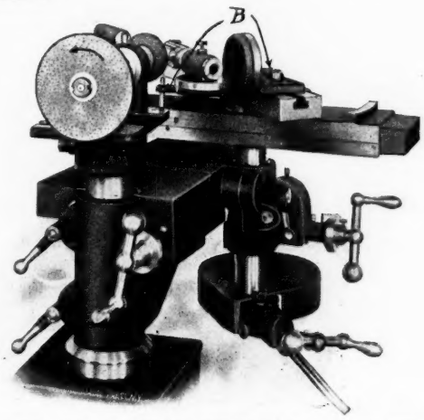

Fig. 3. Tooth Rest Attached to Grinder Table; Grinding Bevel on Chucking Reamers.

There seems to be a difference of opinion as to which direction an emery wheel should run in, whether it should run to or from the cutting edge of the reamer. The danger of carrying the heat to the edge is much greater when the wheel runs toward the edge, and thus the grinding must proceed more slowly and carefully. We grind all of our cutters and reamers whenever possible with the emery wheel running in a direction away from the edge. It requires very little practice on the part of the operator to hold the work to the tooth rest, and the result is more satisfactory, since it leaves a cleaner cutting edge, while the danger of overheating is reduced. In order to carry out this work precisely, it was necessary to provide the grinder with a micrometer dial on the vertical adjustment, as shown in Fig. 3.

The reamers as above described are ground on a Cincinnati Milling Machine Co.'s universal cutter and tool grinder.

* * *

The first wire-wound guns built for approval by the United States Government were faulty because of lack of longitudinal strength. They were built by winding steel wire over a set of steel staves which formed the core. The staves formed the sole basis of longitudinal strength and were inadequate; the muzzle of a wire-wound gun would droop after being fired a few times, and there was the ever-present danger of longitudinal rupture. The new design of this type is being built on somewhat different lines. The core consists of a thin tube which is fluted on its exterior similar to a reamer. Over this tube are wrapped eighteen steel sheets, for the 6-inch gun, in scroll shape, the inner end of each sheet being fitted into the groove or flute referred to. Each sheet makes about one-half turn at the powder chamber, but, as their width narrows toward the muzzle, less and less of the circle is included as the muzzle is approached. The principle of this construction utilizes the friction between the adjacent steel sheets to resist tangential rupture to the fullest extent since the coefficient of friction multiplied by the enormous pressure exerted by the superimposed windings, is greater than the tensile strength of the sheets. The steel plates, while not having so high a tensile strength as wire, are superior to a homogeneous steel tube, and, of course, strengthen the gun fully as much longitudinally.

PRATT INSTITUTE COURSES.

The annual report of Mr. Arthur L. Williston, director of the Department of Science and Technology, Pratt Institute, Brooklyn, N. Y., has been received. Pratt Institute is doing good work in all its departments but what is of especial interest to MACHINERY readers is the fact that it has courses in steam and machine design, shop work, applied electricity, etc., that are planned for the training of men to fill positions of the foreman type. This is touched upon in this year's report, from which we quote below:

"These courses occupy a rather unique position in the field of technical education. They are not to educate engineers, investigators or teachers of applied science, as are the four year courses in the colleges and universities, and it is not expected that they will enable their graduates to solve the more important problems in modern engineering; neither are they, on the other hand, trade courses, intended only for those who wish to become mechanics—they occupy a middle ground between these two. The trained workers in the electrical and mechanical fields are, in a general way, divided into three different classes; the first comprising the comparatively few men who originate and direct operations requiring the services of many. In this class we find the engineering experts, designing and consulting engineers, and many others who bear the prime responsibility for the successful operation of industrial and engineering enterprises. The third and last class is composed of the skilled laborers, and trained mechanics. Between the two there is a constantly widening field, the workers in which constitute the second class and occupy positions secondary and subordinate to the members of the first class, but nevertheless of great importance. They are the assistants to the engineers, the supervisors of skilled labor, or the specialists performing operations requiring a degree of knowledge and training in excess of that possessed by those in the third class. The commercial demand for technically trained workers of this second or intermediate grade is keen, and it is to afford a means for them to obtain the training that they need that the two year technical courses in the Institute are primarily intended. These are so planned as to give young men who have some natural mechanical ability a grasp of the practical details of mechanical and electrical machinery and apparatus; and a knowledge of the principles of its operation sufficient to enable them to inspect or supervise intelligently the construction or erection of it, or to design it in detail under the direction of the engineers who are responsible for it.

In electrical engineering work there is now an especially large class of positions needing men of just such attainments to fill them. A great variety of positions such as those included under the terms inspectors, department foremen, assistant superintendents, foremen of erection and maintenance, chief engineers in power plants, draftsmen, detail designers, and engineers' assistants of all sorts, all belong to this class."

Work of the character outlined in the above extract is to be highly commended. The complicated machinery and highly developed methods of present industrial work require well-trained men for foremen's positions. In many cases they must be men well grounded in general principles and capable of sound reasoning. It is commonly said that these positions are the most difficult to fill with the right kind of men, and a school endeavoring to supply courses of study for them should receive the commendation of all who have to employ men of this class. It is needless to say that having secured an education of this kind there is nothing to prevent a man's rising higher, if he has it in him to do it. Such an education ought to, and undoubtedly would, teach a student how to study, where to look for further information if he wanted it, and in general how calculations are to be made. We have no doubt that many students who have this foundation will, through further study carried on without the assistance of instructors, be enabled to obtain a very broad education.

* * *

The first electric railway in Peru was opened to traffic February 17, this year. This road is eight miles long and connects the capital, Lima, with a seaside resort. The cars and power plant are of American manufacture. Another road will soon be completed between Lima and Callao, which is the seaport. This line will be ten miles long and double track.

KOEHLER'S PROFILE LATHE.

ROBERT GRIMSHAW.

Ordinary lathes use for profile work either forming tools, or plain tools and profile guides. In some few cases it is necessary to employ more complicated appliances; this is for instance the case in turning crowned pulleys or hand-wheels; sometimes in working these hand work is needed.

Forming tools are used for small objects; for larger pieces there would be too much tool changing before the article gets its final dimensions and shape; so here profile guides are preferably used. The simplest such guide is a plain curved piece; and this can be used advantageously where there are no sudden steps; for instance on conical shells for ordnance.

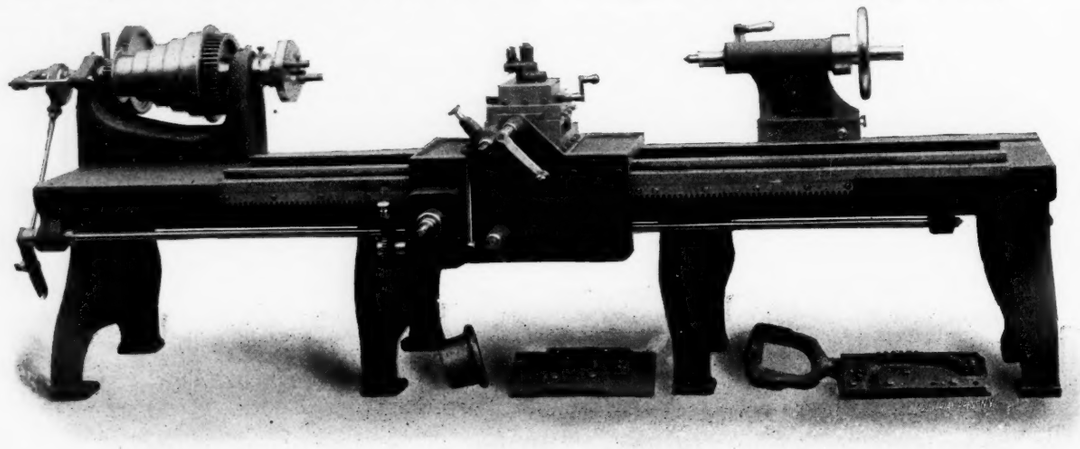

Fig. 1. Special German Lathe for Turning Irregular Forms.

For undercutting, or where there are sudden steps in the contour of the piece, there are sometimes employed profile guides having a lengthwise or a rotary motion. This is the case with working car-wheel flanges; but for this class of work the guide is limited to about 20 inches in length. Connecting and parallel rods, crossheads, piston-heads, cylinder-covers, etc., are often turned by hand.

The lathe shown in Fig. 1 is intended for working all sorts of profiles. The profile guides or cams correspond to the shape of the piece of work. The tool gets a regular motion along

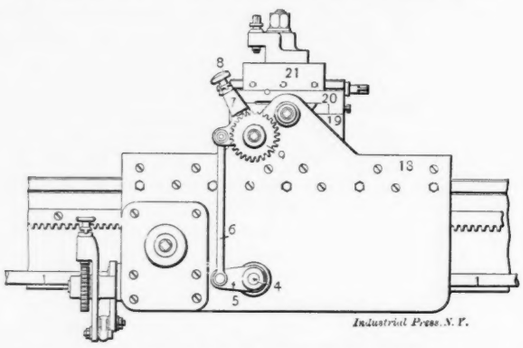

Fig. 2. Connections of Feed Device at Front of Carriage.

the edge of the guide. The feed is proportioned to the length of the curve and not to that of the ways. The tool and the copying point have similar paths, rendering impossible an error in copying. The guides can lie by unused while the lathe is used for straight work.

The head and tailstocks are of the usual design. The carriage runs on ways that project somewhat in front, and gets its motion from the main spindle by an eccentric and ratchet gear. Figs. 2 to 4 show the carriage with part of the bed; Fig. 3 is a vertical section of the carriage. Fig. 6 shows that part of the ways which is covered by the carriage in Fig. 5; also part of a changeable profile piece. The small gear wheel in Fig. 6 belongs to the carriage and gives it a motion corresponding to that of the profile piece.

By means of an eccentric on the spindle (see Fig. 2) the slotted shaft 1, Figs. 2 and 4, is given a vibrating motion, of variable amount, which is transmitted by the gears 2 and 3, Figs. 3 and 4, to the bolt 4, the lever 5 and the link 6 to the angle-arm 7. This latter bears a spring pin, 8, (Figs. 2 and 3), which can engage in the teeth of the gear 9 and effect the feed by means of the vibration of the lever 7.

If the spring pin 8 is raised a trifle and turned through 90 degrees, the wheel 9 is thrown out of action; if further turned through 90 degrees, wheel 9 is thrown in, but reversed.

The gear 9 is always in mesh with the shaft 10 (Figs. 3 and 5) and each time that it is thrown in causes a slight movement of the worm 11. (Figs. 3 and 5.)

The shaft 10 is adjustable in the worm 11, but has two spring keys, which run in corresponding grooves in the worm 11. As the worm is always in gear with the worm wheel 12

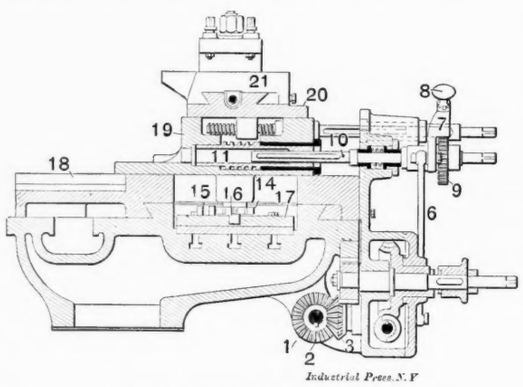

Fig. 3. Cross-section of Carriage.

(Figs. 4 and 5) the latter is rotated by the worm and through the vertical arbor 13 (Fig. 4) effects the movement of the small idle gear 14 (Figs. 4 and 6). While this gear 14 revolves

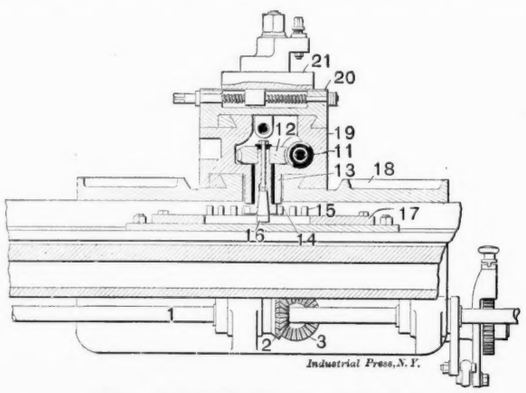

Fig. 4. Longitudinal Section of Carriage.

around the rack 15, made up of a row of pins (Fig. 6), the tracing point slides in the groove of the profile guide 17 and thereby insures the regular movement of the carriage, as well as the proper meshing of the idle wheel 14 with the pins of the rack 15.

The slides 18, 19 (Figs. 2-5) get their movement from the shaft 13. The lower one of these slides (18) runs only lengthwise on the ways, while the other (19) has both lengthwise and cross motion on the first slide (18). The two upper slides (20, 21) are only for adjustment of the tool. All points of the slides 19, 20, 21, and the lathe-tool get the same curved motion as the tracing point.

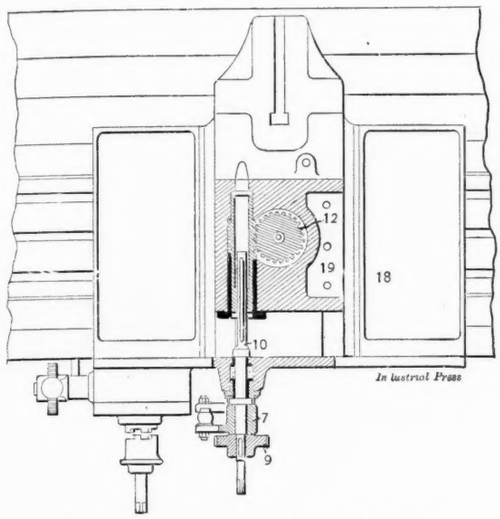

Fig. 5. Plan, showing Further Details of Feed.

To the right of Fig. 1 can be seen the same guide as in Fig. 6, and a parallel-rod stub-end turned to the same outline. The piece on the left is a cam with the standard profile of the Saxon State railway car wheel flanges and the guide therefor.

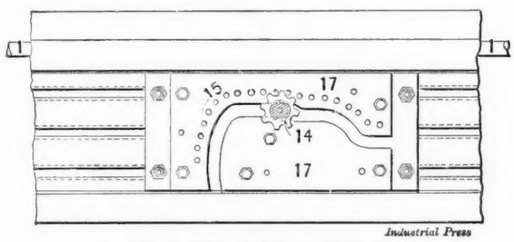

Fig 6. View of Cam or Former.

To use the lathe for ordinary turning, the guide is removed. The gear work (Figs. 2 and 3) can be thrown out by a clutch. To lessen wear of the wedges in the grooves, they have spring bearings. The guides are made of cast iron; the rack 15 of Stubs steel pins.

[The usual method of turning irregular work in the lathe is to use a cam or former in place of the slide of the taper attachment, the cam having a contour corresponding to the shape of the piece to be turned. A roll or pin attached to an extension of the cross slide at the rear of the carriage bears against the edge of the cam and is held in contact with it by means of a weight. Such a crude arrangement, however, is not practicable for the class of work mentioned by Mr. Grimshaw, where the tool must move in or out a considerable distance during a comparatively small travel of the carriage; but the lathe described in this article is adapted for all classes of irregular work, because the cam controls not only the crosswise movement of the cross-slide of the lathe, but the longitudinal movement of the carriage as well. In the case of the ordinary engine lathe having independent longitudinal feed for the carriage, and fitted up with a cam or former in place of the taper attachment, only the crosswise movement is under the control of the cam and the carriage travels ahead at a uniform rate, which at times is too rapid to allow the tool to follow the curvature of the cam. This difficulty is sometimes overcome, as explained by Mr. Grimshaw, by the use of a rotary cam which makes it possible to give the cross-slide a very rapid motion in or out, while the carriage itself is moved ahead with a very slow feed.—EDITOR.]

* * *

A LARGE VERTICAL PLANER.

FRANK C. PERKINS.

The English self-acting vertical planing machine below was constructed at Manchester, England, at the Ancoats Works, by John Hetherington & Sons, Ltd. The machine is different in some details, from the familiar slotter, the construction being more nearly in accord with planer design, rather than shaper design, and the tool can rightfully be designated as a vertical traveling-head shaper.

The machine is provided with power and hand feeds in both directions, to the longitudinal, tranverse and circular motions. It will plane up to a height of 9 feet; also to a length of 9 feet. The diameter of the circular table is 6 feet and the diameter of the largest object that can be planed is 9 feet 6 inches. The feeds are independent and may be varied while the machine is in motion.

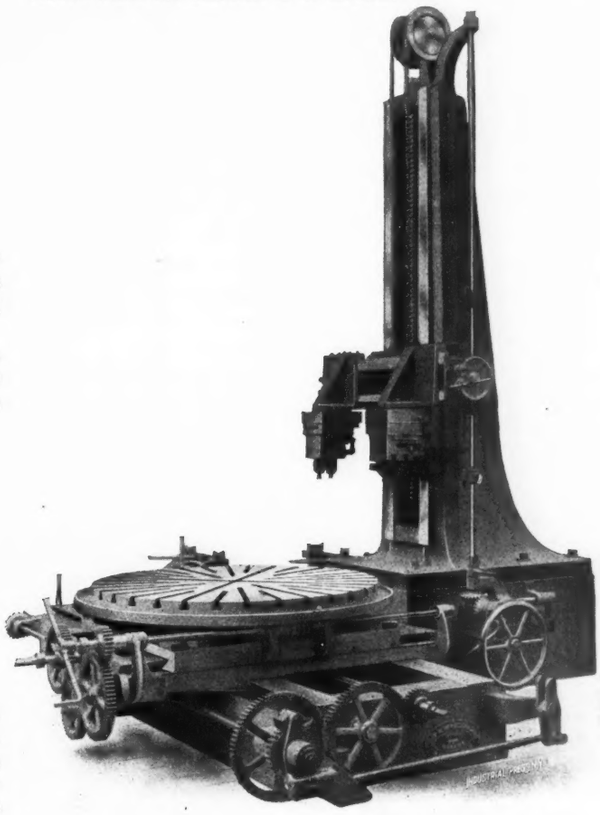

Vertical Planer, 9 feet Stroke; will Plane Circle 9 feet 6 inches Diameter.

The table can be locked in four positive positions, each at right angles with the adjacent one. The upright is of box pattern and planed to fit the box base. The length of the bed is 14 feet 3 inches. The vertical slide is balanced by two chains. The cross slide, which is attached to the vertical slide, is fitted with two independent, compound, full swivel tool boxes, with hinged spring clappers, for relieving the tool on the return stroke. The clappers are provided with T-slots and double tool posts, with independent, self-acting horizontal feed along the cross slide, which may be varied while the machine is in motion. There is a hand adjustment to the compound slides and adjustable stops for different length of strokes and quick-return motion.

* * *

The Rapid Transit Subway station in New York City will have both reciprocating engines and turbine generators of 5,000 kilowatts capacity. The former are 40 feet in diameter and weigh 980,000 pounds; the latter are only 12 feet 6 inches in diameter and weigh 234,000 pounds, the weights of journals and shaft excluded in each case.

Copyright, 1904, by the INDUSTRIAL PRESS.

Entered at the Post-Office in New York City as Second-class Matter.

MACHINERY

DESIGN—CONSTRUCTION—OPERATION

PUBLISHED MONTHLY BY

THE INDUSTRIAL PRESS,

66-70 WEST BROADWAY, NEW YORK CITY.

LESTER G. FRENCH, Editor.
FRED E. ROGERS, Associate Editor.

The receipt of a subscription is acknowledged by sending the current issue. Remittances should be made to THE INDUSTRIAL PRESS, and not to the Editors. Money enclosed in letters is at the risk of the sender. Changes of address must reach us by the 15th to take effect on the following month; give old address as well as new. Single copies can be obtained through any newsdealer.

We solicit communications from practical men on subjects pertaining to machinery, for which the necessary illustrations will be made at our expense. All copy must reach us by the 5th of the month preceding publication.

JUNE, 1904.

NET CIRCULATION FOR MAY, 1904,—23,897 COPIES.

MACHINERY is published in three editions. The practical work of the shop is thoroughly covered in the Shop Edition—$1.00 a year, comprising more than 430 reading pages. The Engineering Edition—$2.00 a year—contains all the matter in the Shop Edition and about 250 pages a year of additional matter, which includes a complete review of mechanical literature, and forty-eight 6 x 9 data sheets filled with condensed data on machine design, engineering practice and shop work. The Foreign Edition, $3.00 a year, comprises the same matter as the Engineering, but is printed on thin paper for transmission abroad.

COMPRESSED AIR AND MACHINE TOOLS.

On Saturday, April 30, William Sellers & Co. entertained a number of the engineering fraternity at their works in Philadelphia. The occasion of the gathering was the completion and exhibition of a new type of planing machine in which the reversal of the platen is effected by a pneumatic clutch; and the visitors were also shown other attractive features about the plant, such as the latest types of Sellers injectors, the Sellers electric cranes, semi-automatic tool grinders, etc. An elaborate luncheon was served the guests shortly after their arrival, after which attention was directed to mechanical matters.

The new planer is 100 inches wide between housings, the platen 20 feet long, and the weight of the platen 60 tons. The casting that was on the platen at the time of the exhibition weighed 17 tons. The design of the machine is distinctly novel and original, and we expect to publish a description of it in a later issue. The pneumatic clutch and its method of application, however, by which there is no reversal of the driving pulleys when the platen reverses, and hence the momentum at the points of reversal is correspondingly reduced, constitute the most striking features. The drive is by a 50-horse-power motor belted to the clutch shaft by a single wide belt. The drive is designed to give a constant return speed of 100 feet a minute to the platen, without regard to the cutting speed, and change gears are employed which in this instance are proportioned to vary the cutting speed from 25 to 48 feet a minute. Apparently this plan of maintaining a uniform return speed at what is considered to be a maximum practical figure, and of providing means for changing the cutting speed, is destined to be very successful on heavy work, with high-speed steels. The employment of the pneumatic clutch accomplishes in a simple manner what it has been attempted to do in a few instances by means of the magnetic clutch, but without any trouble from residual magnetism, which has sometimes been a fault of the latter. By using pneumatic pressure to shift the sliding member of the clutch, the reversal occurs instantly and positively, since it is possible, of course, to so design the clutch that the pressure between the friction surfaces of the clutch may be great enough to carry the load without any slipping whatever. This was shown in the facts that the heavy platen, with its heavy load, could be reversed to a line, repeatedly, and with a platen travel much less than a foot.

As far as we know, William Sellers & Co. have introduced a new principle of construction in their machine, and may it not be that with the increasing use of compressed air in our machine shops this principle can profitably be extended to other kinds of machine tools, where the simple turning of a valve in order to produce certain motions would be much simpler and easier for the operator than any mechanically operated device. Machine tools are required to be so heavy to stand up under the heavy cuts and rapid speeds and feeds now demanded, that many manufacturers find it absolutely necessary to provide means for moving the heads, carriages, etc., of their machines by power, even when no work is being done by machine. Moreover, hydraulic feeds are being experimented with as being more desirable for heavy duty, just as the hydraulic press is more desirable than the power-driven press under like conditions. We have recently illustrated a massive hydraulic-feed boring lathe made by the Niles Tool Works; and, to go to the other extreme, it is known that the manufacturer of a type of small lathe has done much experimental work with hydraulic feeds, which shows that the hydraulic principle may be adapted to almost any conditions. In a similar manner, we believe that a pneumatic action, in connection with clutches or other mechanical devices, has a wide range of usefulness yet scarcely realized by designers.

* * *

NOTES AND COMMENT.

A wild panic occurred on the East River ferryboat America on the evening of April 26, when her engineer died at the throttle. As the boat neared the Williamsburg slip the pilot signalled to slow down, but no attention was given it. Again and again was the signal rung, and by this time the boat had bumped into the slip, damaging it and the latter badly, besides injuring a number of passengers. After striking, the vessel rebounded, but the paddle-wheels were running full speed ahead, and again and again she crashed into the piles. The fireman rushed to the engine room and found the engineer dead on the floor, where he had fallen when stricken with heart failure. Where there is only one man in the engine room, as in this case, it would appear that there is need for something on the automatic engine stop order. With such an equipment the pressing of a button in the pilot house would have saved a lot of damage and a bad scare to the passengers. It was fortunate that no worse result was the outcome.

The new Springfield rifle, described in these columns a few months ago, is credited by competent authorities with being the most efficient and durable—or, in other words, the most deadly—army rifle extant. Indications are, however, that those who are making their life work a study of ways and means for annihilating the enemy in the quickest and most effective manner will not long remain content with even this refinement of the gunsmith's art. It has been proposed to use a central steel core in the infantry bullet and even to make a steel bullet, which type as yet has not proved successful. But these improvements will not long satisfy the War Department, for the military world is inclining to an automatic infantry gun similar in principle to the automatic machine gun, but of course with a much shorter duration of fire at one loading of the magazine. If such a gun should be adopted, however, its advantage would not consist so much in its extreme rapidity of fire as in the fact that it would enable the infantry soldier to shoot more effectively at critical times. Extreme rapidity of fire under ordinary conditions is a disadvantage, because it is wasteful of ammunition and would call for an increase in the size of the already cumbersome ammunition trains. The effectiveness of the arm would come from the fact that it would furnish the means of delivering rapidly a comparatively small number of shots without taking the gun from the shoulder. This would increase the chances of hitting a small or obscure target at a considerable distance, because the soldier could fire a succession of shots without loading his piece or changing his aim. It would give him an opportunity to land several shots very close to the mark.

THE COLUMBIA BICYCLE TWO-SPEED GEAR.

A COMBINED FREE-WHEEL, BRAKE AND SPEED CHANGING MECHANISM.

Last year the Pope Mfg. Co., the well-known bicycle manufacturers, brought out a two-speed gear in combination with their Columbia bevel gear drive, coaster or free-wheel and back-pedal brake. This ingenious device, which is almost entirely confined within the limits of the rear hub barrel, is presented herewith as an interesting example of a mechanism that performs a number of functions semi-automatically, there being no resort to the use of manipulating levers save those by which the bicycle is propelled, i. e., the pedals. These are moved in a backward direction to bring about the changes, as will be explained. With this gear it is possible: 1. To drive at low gear (68). 2. To coast from low gear, that is, let the wheel run freely of its own volition without working the pedals. 3. To apply the brake from low gear position. 4. To change from low to high gear (92), or *vice versa*. 5. To drive at high gear. 6. To coast from high gear. 7. To apply the brake from high gear.

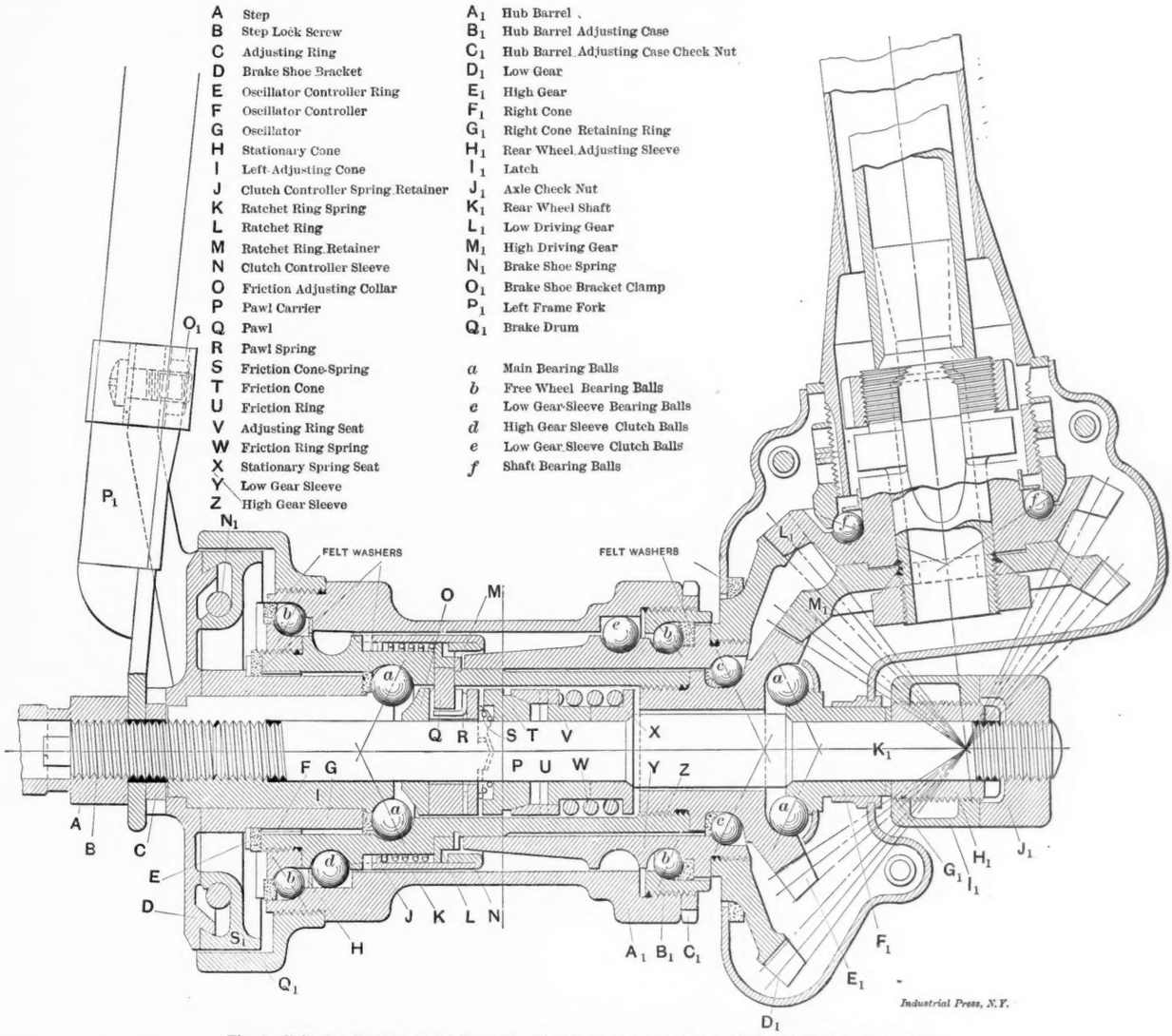

Fig. 1. Full-size Section of the Columbia Bicycle Two-speed, Free-wheel and Brake Mechanism.

The rear hub is shown in section on a horizontal plane with all the parts assembled, in Fig 1. The driving shaft, which is concealed within the right lower member of the frame, carries at its rear end the two bevel gears, L_1 and M_1, the low and high driving gears respectively. The low gear mechanism can be dismissed in a few words, as it is relatively simple. It should not be inferred from this statement, however, that the remaining mechanism is excessively complicated, for such is not the case. While there are many parts, the action is quite simple and easily followed with the aid of the detail drawings shown in Figs. 2 to 6, inclusive.

In the first place it will be noted that the low gear D_1 is mounted on a sleeve Y, which is apparently grooved for three ball races. There are properly, however, only two ball races, these being for the balls b and c. The right ball race b, with the corresponding race b on the left, form the free-wheel bearings when coasting. The ball race c takes care of the difference in motion between the low gear sleeve Y and the high gear sleeve Z. The low gear sleeve is thus held between an exterior and an interior ball race and these form its principal supports. What is apparently the third ball race is really a ball clutch, there being four balls, of which e is one. The interior of the hub barrel, on this transverse plane (also at the opposite end), has eleven notches or teeth milled with their sides in one direction more steeply inclined than the opposite sides. This may be seen in A_1, Fig. 2. In Y, Fig. 3, it will be seen that the low gear sleeve has four holes or pockets drilled tangentially to a small circle concentric with the exterior. These holes form the retreats of the balls when the wheel is running free or when being driven by the high gear. When the low gear is driving, one of the four balls is engaged between the low gear sleeve and the side of one of the eleven interior clutch teeth, and thus transmits motion to the wheel. There being four balls and eleven clutch teeth, it follows that there are forty-four locking positions in one turn of the sleeve. This also applies to the high gear sleeve. The simplicity of the low gear action lies in the fact that it acts only when the

high gear is restrained, and, therefore, it merely requires a simple clutch that shall release when moved backward, either actually or relatively to the hub.

The high gear sleeve engages the hub barrel by a similar ball clutch, one of the balls being shown at *d*. The disposition of the pockets for the balls in the high gear sleeve is also the same, as will be seen from the sections shown at *Z*, Fig. 3. Now since the sleeve *Z* runs at a higher rate than *Y*, it follows that its clutch would always be the one driving the wheel unless means were provided to prevent the clutch balls acting when desiring to drive at low gear. The immediate means provided is a shutter *N* called the clutch controller sleeve, may be seen at *L*, Fig. 4. These teeth are always in contact with cam faces, cut in the interior of the right end of the clutch controller sleeve *N*, being held together by the coil spring *K*. Now if the rider has been pedaling the high gear, the backward movement of the clutch controller sleeve moves the interior cam faces over the face of the teeth cut in the side of the ratchet ring, into such a position that the shutter sleeve is free to move to the left and shut the four clutch balls *d* within their pockets. Then the forward movement of the pedals brings the low gear sleeve into clutch action with the hub barrel, and he travels forward in low gear. The high gear sleeve *Z*, meanwhile, rotates at a higher speed, but idly,

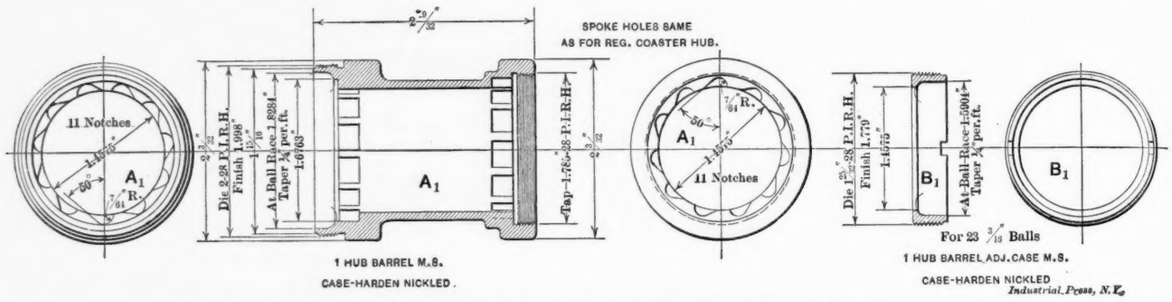
SPOKE HOLES SAME AS FOR REG. COASTER HUB.
11 Notches
A1
B1
For 23 3/16 Balls
1 HUB BARREL M.S. CASE-HARDEN NICKLED.
1 HUB BARREL ADJ. CASE M.S. CASE-HARDEN NICKLED
Industrial Press, N.Y.

Fig. 2. Details of Hub Barrel and Adjusting Case, showing Notches for Clutch Balls. One-half full size.

which is also shown in detail at *N*, Fig. 3. This sleeve has four fingers, j_1, which engage in four grooves milled in the high gear sleeve in line with the ball pockets, as indicated at *j*. When this shutter is moved to the left, it imprisons the balls within their pockets and prevents any clutch action. The way in which this shutter is operated in order to change from high to low gear and *vice versa* is as follows:

First we must understand that the pawl *Q*, the pawl carrier *P* and the friction cone *T* rotate forward with the high gear sleeve *Z*. They drag slightly because of the friction of the friction cone *T* which is forced into the seat in the friction ring *U* by the pressure of the light spring *S*. When the rider wishes to change the gear, he stops pedaling forward and since its clutch balls are restrained from acting, being shut within their pockets, as just explained.

Should the rider again move the pedals backward, he will change to high gear again for the reason that a second movement of the interior cam faces of the clutch controller sleeve *N* over the side teeth in the ratchet ring forces the controller sleeve to the right and releases the clutch balls. The moment these are free to act, driving in low gear can no longer continue. Thus each backward movement of the pedals changes from high to low gear, and *vice versa*. Suppose, for instance, the rider has been working the pedals in high gear on a level stretch of road, and has come to the foot of a hill. He throws the machine into low gear, and climbs the hill. Having

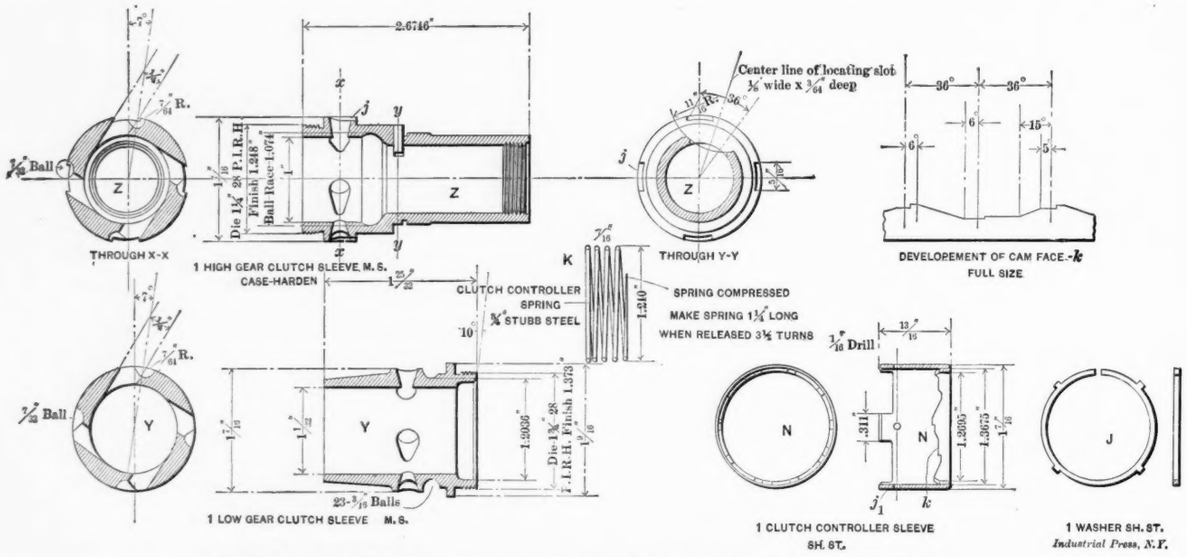
THROUGH X-X
1 HIGH GEAR CLUTCH SLEEVE M.S. CASE-HARDEN
THROUGH Y-Y
DEVELOPEMENT OF CAM FACE-k FULL SIZE
CLUTCH CONTROLLER SPRING 3/16" STUBB STEEL
SPRING COMPRESSED MAKE SPRING 1 3/4" LONG WHEN RELEASED 3 1/2 TURNS
23-3/16 Balls
1 LOW GEAR CLUTCH SLEEVE M.S.
1 CLUTCH CONTROLLER SLEEVE SH. ST.
1 WASHER SH. ST.
Industrial Press, N.Y.

Fig. 3. Details of High and Low Gear Sleeves and Clutch Controller Sleeve. One-half full size.

reverses the pedals slightly, in other words, moves them backward such a distance as experience has taught—a small fraction of a turn. The backward movement of the high gear sleeve *Z* is not at once communicated to the pawl and pawl carrier because the slot in the sleeve *Z* is somewhat wider than the pawl. The backward movement of *Z* is, however, instantly transmitted to the clutch controller sleeve *N* since the fingers j_1 fit closely in the slots. The sleeve *N* tends to turn the ratchet ring *L* with it, but the pawl *Q* engages one of the teeth on its inner surface and stops its movement momentarily.

The ratchet ring also has teeth cut on the right side, as reached the summit the wheel is allowed to run freely down the opposite side until its velocity must be checked, and then an extreme backward movement of the pedals forces the brake into action, as will be explained later, and reduces the speed. At the foot of the grade pedaling is resumed in high gear, the change from low to high gear having been effected incidentally with the application of the brake.

Before describing the action of the brake it is advisable to go back and explain more fully the action of the pawl and pawl carrier when holding the ratchet ring stationary so as to change the clutch controller position. As already stated, the pawl, pawl carrier and friction cone run with the high gear

sleeve, dragging backward slightly all the time. But the drag or resistance is so slight that it would be totally inadequate to check the backward movement of the ratchet ring were it not reinforced in some manner momentarily; that is, when the ratchet ring starts backward the resistance of the pawl carrier must be made several times what it is normally, but this increased resistance must disappear the moment the ratchet ring has changed the position of the shutter sleeve. The way in which the resistance is momentarily increased is as follows:

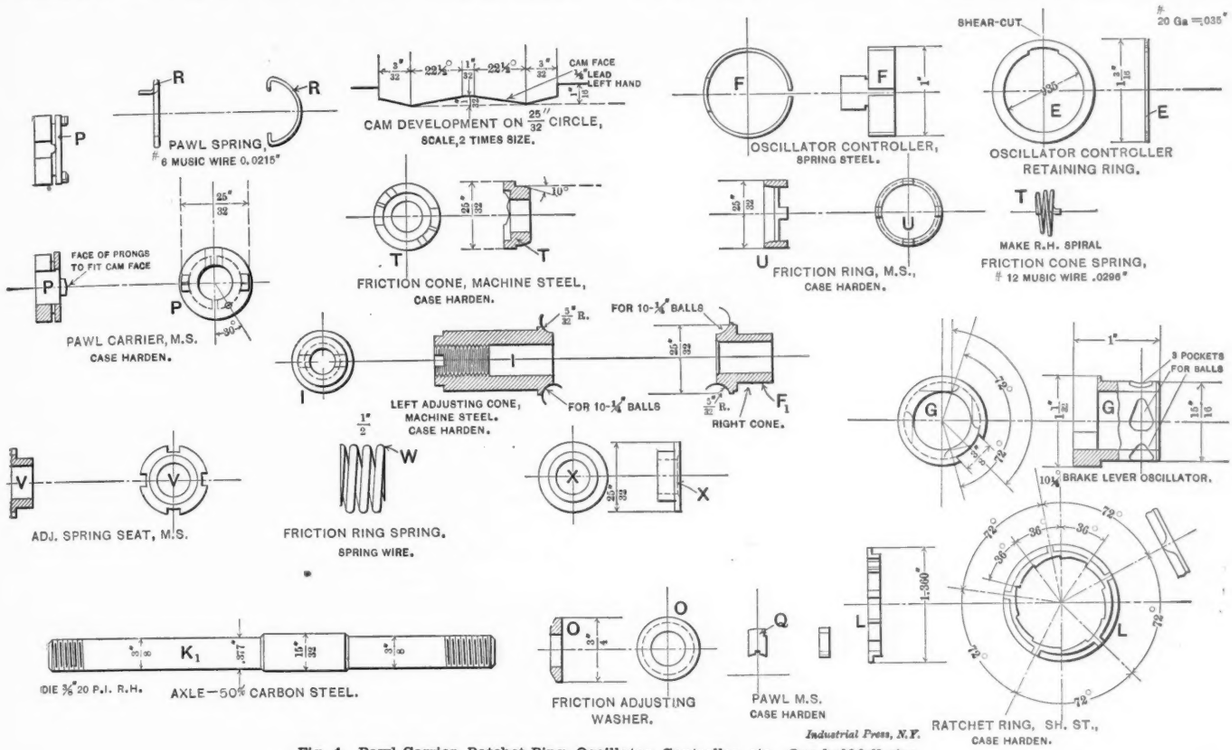
PAWL SPRING, # 6 MUSIC WIRE 0.0215"
CAM DEVELOPMENT ON 25/32" CIRCLE, SCALE, 2 TIMES SIZE.
CAM FACE 1/8" LEAD LEFT HAND
SHEAR-CUT
20 Ga = .035"
OSCILLATOR CONTROLLER, SPRING STEEL.
OSCILLATOR CONTROLLER RETAINING RING.
FACE OF PRONGS TO FIT CAM FACE
PAWL CARRIER, M.S. CASE HARDEN.
FRICTION CONE, MACHINE STEEL, CASE HARDEN.
FRICTION RING, M.S., CASE HARDEN.
MAKE R.H. SPIRAL
FRICTION CONE SPRING, # 12 MUSIC WIRE .0296"
FOR 10-1/4" BALLS
LEFT ADJUSTING CONE, MACHINE STEEL. CASE HARDEN.
RIGHT CONE.
3 POCKETS FOR BALLS
BRAKE LEVER OSCILLATOR.
ADJ. SPRING SEAT, M.S.
FRICTION RING SPRING. SPRING WIRE.
DIE 3/8"-20 P.I. R.H.
AXLE—50% CARBON STEEL.
FRICTION ADJUSTING WASHER.
PAWL M.S. CASE HARDEN
RATCHET RING, SH. ST., CASE HARDEN.
Industrial Press, N.Y.

Fig. 4. Pawl Carrier, Ratchet Ring, Oscillator, Controller, etc. One-half full size.

The pawl carrier *P* has two fingers on the right side which terminate in cam faces and these fit into corresponding faces on the left side of the friction cone *T*. In one direction the sides of the fingers abut against shoulders on the friction cone and carry it forward positively. But when the pawl carrier is moved backward the cam faces slide by one another as their angles and distance from the center of rotation are such that resistance to sliding movement at this point is less than that between the friction cone and friction ring. At the right is a stiff coil spring *W*, held between two collared washers *V* and *X*, each of which is a driving fit upon the axle. The washer *V* has four slots milled in its collar, into which project four fingers from the right side of the friction ring *U*, so that their ends are flush with the right side of the collar on *V*. The spring *W* normally rests against this collar so that movement of the friction ring to the right is at once resisted by the spring. When movement begins between the cam faces on *P* and *T* the spring *W* is compressed and the reaction forces the pawl carrier against the side of the friction adjusting collar *O* with considerable pressure, greatly increasing its frictional resistance to rotation and causing the ratchet ring to do its work. But it is necessary to provide for further backward movement of the high gear sleeve than would be possible if the pawl carrier locked tighter and tighter with further backward movement. So when it has accomplished the movement of the ratchet ring within the clutch controller sleeve, it must release its grip and move backward freely. It is for this reason that the spring *W* is provided. The compression of the spring gives the necessary resistance and it also allows the cam faces to slide by the high points and to drop into the corresponding low points on the opposite sides. See details of *P* and *T* and development of cam faces in Fig. 4. Then the pawl carrier is free to move backward with the high gear sleeve, for the application of the brake. When the sleeve again moves forward the cam faces slide by into the former position so as to be in place for operating the ratchet ring again when required.

As already stated, the extreme backward movement of the high gear sleeve forces the brake into action. This movement is first communicated to an oscillator, *G*, by means of the four clutch balls *d*. The holes for these balls in the high gear sleeve allow them to reach the surface of the oscillator, and in this path there are milled three shallow pockets in the periphery of the oscillator, as may be seen in detail at *G*, Fig. 4. These pockets allow the balls to go into clutch action with the high gear sleeve at twelve points in the circle, there being three pockets in the oscillator and four equally spaced balls. The backward movement of the oscillator is communi-

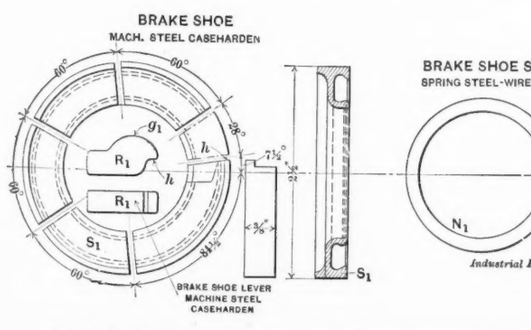

Fig. 5. Brake Shoe and Brake Shoe Spring. One-half full size.

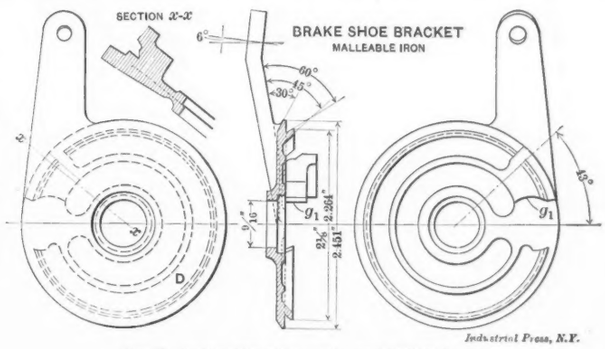

Fig. 6. Brake Shoe Bracket. One-half full size.

cated to the brake lever R_1, Fig. 5, which in turn opens the segments of the brake shoe within the drum and forces them against its inner wall. The rounded surface of the brake lever rests against the rounded recess g_1 in the shoulder on the brake shoe bracket D with the finger h between the ends of the brake shoe segments. The proportions are such that a heavy braking effect is developed with a comparatively easy backward pressure on the pedals. When the backward pressure on the pedals is removed the spring N_1 instantly contracts the segments and releases the brake. The object of the oscillator controller is to provide a slight frictional resistance to its movement so that it will remain closely in contact with the brake lever.

* * *

HIGH-SPEED TOOL STEELS.

PRACTICAL SUGGESTIONS FOR THEIR TREATMENT.

WALTER BROWN.

For several years this subject has been much talked of, but until lately not a great deal had been accomplished. Even now high-speed steel is only in its infancy, manufacturers being constantly under the necessity of experimenting and changing the constituents to secure better results. Even the best yet produced will have occasional hard streaks when annealed to its softest state; and flaws are of frequent occurrence. Another disadvantage is its greater hardness, compared with carbon steel.

In spite of its shortcomings, however, it is very evidently the cutting-tool material of the future, both because of its superior qualities, all things considered, and of the likelihood that most of its present failings will be overcome as manufacturers get a better knowledge of its nature and behavior.

The chief difficulty in the way of its use now is its exceeding brittleness. Many a user has become discouraged with the result of a few experiments and has, because of finding that it lacked the toughness of other steels, discarded its use entirely. More experience would, if intelligently obtained, have demonstrated without question the great value of this new product of the metallurgist's skill. The question of brittleness is largely a question of treatment; and intelligent experience will very largely obviate the difficulty so that it will be tough enough to stand up under any proper conditions of work. Every tool dresser knows how to handle carbon tool steels, and is guided by his knowledge of their qualities at different temperatures as indicated by their varying colors. When he gets a high-speed steel he naturally treats it much as he would carbon steel. This is where most of the trouble begins. The smith must learn an entirely different set of color values and methods of treatment. He thinks that if he has succeeded in getting a hardness greater than that of his file, he has done his job. That, however, has nothing to do with the fitness of the tool. I have known cases (with a certain make of steel) where the tool would do the best work while still soft enough to take a good Swiss file. In other steels a similar degree of softness, or even a degree of hardness much greater than that of ordinary steel would not work, the tool "gumming up" and rapidly burning up. The whole secret lies in getting the tool to such a heat, in the process of hardening, that the constituent molecules are mobile, and then "drawing" it to the right point. When the toolmaker has mastered this secret, he can produce a tool of high-speed steel as tough as any of carbon steel. The mastering of it is largely a matter of experience. Our own experiences have been so interesting and successful that I have thought they might prove of help to others, and I submit them herewith.

The tools should be placed in a pipe or box, well surrounded with small pieces of coke, the packing case then being sealed up with fire clay. Small holes must be left for the escape of gases, otherwise the clay will blow out. The heating furnace should have been previously heated to a white heat. The packing case is left in the heat from one to three hours, according to size. When removed from the furnace, the box should be as near the bath of fish oil as may be, so that there will be no unnecessary delay in bringing from the gases of the packing case to the bath. Exposure to the air not only causes scale, and therefore variation in size, but tends to affect the precision of the hardening process. Observance of this caution will prevent a variation of more than a thousandth of an inch in tools of moderate size. Carbon steel usually varies several thousandths as a result of hardening.

The method of packing will depend somewhat upon the shape of the tool. It is important to pack in such a way that all tools packed in one case be so placed as to be handled very quickly, and at once plunged into the bath, to prevent scaling by reason of contact with the air, as explained above. In case of milling cutters and key-seat cutters, a good way is to suspend them all from a rod, each separated from its neighbors by a slight space, sufficient to allow a free circulation of oil when plunged. Neglect of this caution will be very likely to cause cracks, from the unequal contraction of the cutters, the outer edges only being brought into immediate contact with the bath, and therefore shrinking more rapidly than the interior parts.

For taps, drills, and similar shaped tools, this hardening leaves the steel too brittle, and as soon as the tool has become a little dull it breaks off. To avoid this the tool can be drawn as can a carbon steel tool. But here, too, a new set of color scales must be learned. The blue heat of carbon steel is not enough for the high-speed steel. The heat must be carried on until the metal reaches a greenish tinge. It is then allowed to cool in a dry place free from air drafts.

It is now much tougher and softer than before. In case it needs still further softening, it can be done by reheating, bringing it to a faint red, dull enough to be perceptible only in a dark place (an empty nail keg is convenient for this use) and then cooled as before. We have made taps as small as 5-16 inch in diameter to be used in an automatic nut tapping machine, about the hardest work to which a tap can be put, with gratifying results. In the test three taps cut 92,000 nuts, an average of almost 31,000 nuts per tap; with carbon steel taps we cut 6,000 nuts per tap. No effort was made to speed up the machine, the test being one of durability only. The carbon steel taps cost about ten cents, and the high-speed taps about forty, or four times as much. The latter, however, cut about five times as many nuts. Besides this, there is also to be taken into account the more important saving in the time used formerly for stopping the machine, and removing and grinding taps, which is five times as great when carbon steel taps are used. This is not mentioned as a particularly demonstrative test, but merely to show that high-speed steel can be profitably used for small tools, if properly treated. Another place where we are using high-speed steel with profit and satisfaction in small tools is in drills. The saving here is very marked; but the statements and claims of several makers of such drills is not verified by our experience. We find that we can run such a drill at about double the speed of the ordinary drill, and at the same time cut more holes.

Makers of the new steels are in the habit of making large claims as to speeds attainable. We have tried about every such steel on the market, giving each a thorough test. Our experience usually bears out the moderate statements, and sometimes the extravagant ones put forth by some makers as to what is possible. For instance, we have cut a 1-16 chip, 1-32 feed, at a rate of 266 feet per minute peripheral speed, from a rod of machine steel. Such speeds are possible for short periods; but whoever buys a rapid cutting steel with the expectation of maintaining such speed will be sadly disappointed. With a fine feed, even four hundred feet per minute can be cut under very favorable circumstances. But think of the chip that comes off! In case of steel the chip is no such thing as we are accustomed to, breaking into short pieces and dropping into the box below. At a speed of, say, two hundred feet per minute, the chip comes writhing and twisting, almost red hot, in a continuous length, shooting here and there, everywhere but the chip box; and quick must be the workman that manages to keep well out of the way of it, for it "sticketh like a brother" when once he gets tangled in it. Possibly, in time, a way will be found to take care of such chips. Until this is done, however, a moderate speed is most desirable. We find that on steel, where there is no considerable thickness of metal to remove, a speed of one hundred feet a minute is very satisfactory. This allows taking

care of chips, and the tools stand up well under it. In turning gray iron, where the scale is to be removed, about seventy feet per minute is giving us the best results. Naturally, however, there being so many different kinds of materials to work up, and each one of these varying more or less themselves, there can be no set rule for speed. Each job will work out a rate for itself. The main thing is to get out the job as fast and as well as possible, and at the same time to lose as little time as may be in grinding the tool.

Another word about the saving to be effected. This will depend among other things upon the number of machines that are run. If only one machine runs on a job, there will not be a saving of two-thirds simply because the speed is trebled. It must be remembered that perhaps fifty per cent. of the time for doing a job on a single machine is used in jigging the piece and setting the tool.

The high initial cost of the new steels has made it necessary to devise means for reducing the quantity of metal in the tools used. The result has been the production of some very ingenious schemes for holding cutters. The lathe tool holder is, of course, familiar to all. Milling cutters, hollow mills, and reamers with inserted teeth are scarcely less familiar. It is now true that we are making all these tools with inserted cutters of rapid cutting steel at less cost than the old carbon steel tools. At the same time they are doing from three to ten times the work, and at a much greater speed.

* * *

THE ECCENTROLINEAD.

M. S. SMITH.

At some time or another there will come to every draftsman an occasion to use an instrument called the "eccentrolinead." Primarily, this instrument consists of a long straight-edge *A*, Fig. 1, which is swung from a clamp nut *B* on a metal arm *C*. Sometimes the clamp nut *B* moves in a slot *E*, so that the straight-edge *A* can be extended at will in either direction from *B*. In the end of the arm *C* is the needle point *D*. By means of the clamp nut *B* the angle between the straight-edge *A* and the arm *C* can be varied at will.

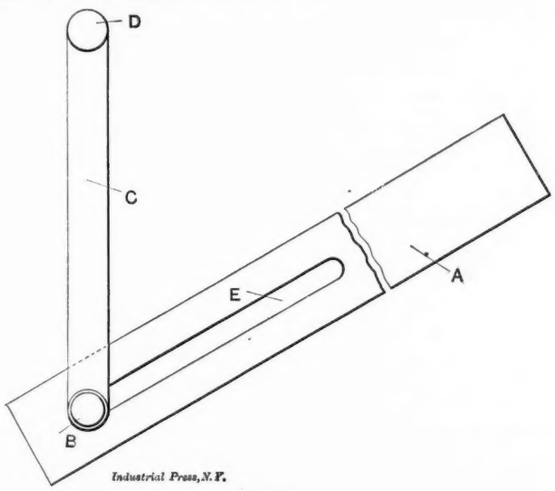

Fig. 1.

Its usefulness lies in the fact that with it can be drawn a system of lines, each at any given angle with a radius to that line, and passing through the common center of the system. Fig. 2 illustrates the principle just stated. In this case the line *AB* is the line drawn by the straight-edge when it has been set to the angle *a* with the radius to this line. The radius represents the arm of the eccentrolinead.

It is readily seen that by varying the angle between the arm and the straight-edge, any regular figure desired can be drawn.

Fig. 3 illustrates its use in the laying out of tangent lines, as the spokes of bicycle wheels. Its chief advantage, however, lies in the ease and accuracy with which this kind of lines can be drawn when they are very short and numerous. The writer has in mind the drawing of a unique ratchet. The teeth of this ratchet were on the inside of a hollow steel gear, Fig. 4, whose inside diameter was 2¼ inches, and which contained 32 teeth.

The depth of these teeth was about 1-16 of an inch and the angle between the sides of the teeth was 90 deg., the radius to the bottom of the tooth bisecting this angle. These conditions made the length of the side of the tooth from top to bottom somewhat less than ⅛ of an inch. It is readily seen that to lay out these lines by stepping off points with the dividers, and to do it accurately, would be difficult, to say nothing of being very laborious.

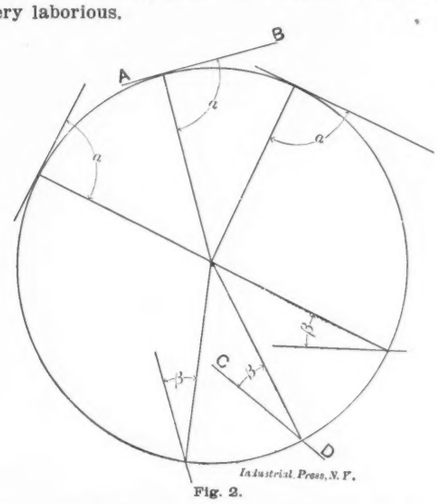

Fig. 2.

With the eccentrolinead it becomes very simple—two circles are drawn respectively for the tops and bottoms of the ratchet teeth and the pitch is laid out on the circle representing the bottoms of the teeth. Care being taken to start the pointing off for the pitch from the intersection of the horizontal center line and the circle representing the bottom of the teeth. A long 45 deg. line is then drawn with the triangle and T-square from this intersection. The Eccentrolinead is set once for all to this line. After this, all that is necessary is to revolve the straight-edge to the next pitch point, and the line drawn will be 45 deg. from the radius to that point. This operation is repeated for each pitch point on the circle when one side of each tooth will have been drawn. The other side of the tooth is laid out in a similar manner.

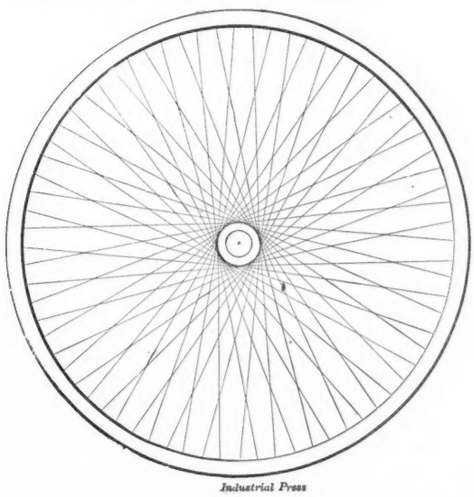

Fig. 3.

This is only one case of many, and as may frequently happen, the sides of the tooth may not come exactly at the angles obtained from the common triangles, but in any case for a series of lines each of which makes the same angle with its respective radius, only one setting of the instrument is required, thus greatly shortening the work, and in the case of very short lines, greatly increasing its accuracy.

However, the eccentrolinead costs from three to four dollars, an element, which, considering the comparatively small use for the instrument, has kept it out of the hands of many draftsmen.

The following is a homely substitute which can be prepared in a moment by any one possessing a triangle and a bit of tracing cloth or heavy tracing paper. It is the eccentrolinead possessed by the writer and which he has used at divers times to excellent advantage. The accompanying illustrations were drawn with this substitute for the eccentrolinead.

Paste the tracing cloth firmly on one side of the triangle and when the direction of one of the series of lines to be drawn has been determined, place the edge of the triangle along this line in such a position as to bring the center of the series of lines within the opening of the triangle, being careful to have the side of the triangle on which the tracing cloth has been pasted next to the drawing. When the triangle has been properly placed take a fine needle and drive it firmly through the tracing cloth and into the center of the series. The triangle can then be revolved about this center and in every position will give a line which makes an angle with a radius to a point on this line equal to the angle between the original line and the radius to its corresponding point.

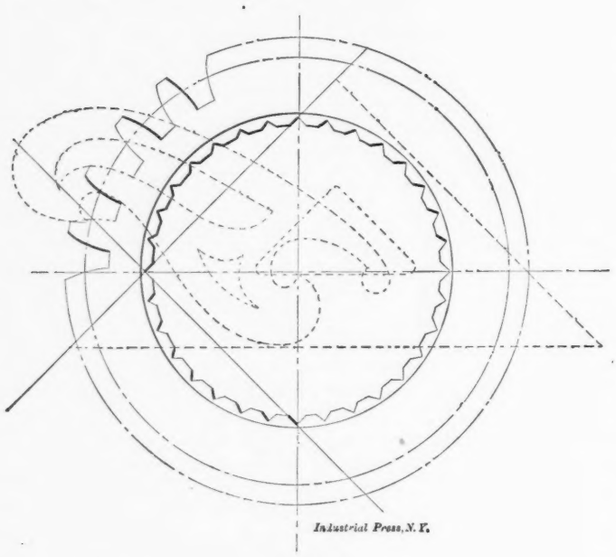

Fig. 4.

Not only the triangles may be used to good advantage by means of this little "stunt," but also the irregular curves. Any series of curves whose curvature throughout the series is the same, and whose position relative to a common center is the same, may be drawn very easily by the above method with an irregular curve.

I know of no better illustration than the drawing of the profiles of gear teeth, Fig. 4. The pitch of the teeth is stepped off on the pitch circle and the profile of one tooth is accurately drawn. Of course, we must have an irregular curve which fits this profile. If this is not possible, the profile may be laid out on a piece of bristol board and carefully cut. The curve in either case is used in the same manner as the triangle.

There are, doubtless, many different ways of applying the principle of the eccentrolinead which space will not permit of mentioning here. The writer, however, will be highly gratified if the principle laid down in the above will be of service to any of his fellow draftsmen.

* * *

TABLE FOR COMPUTING THE COST OF CASTINGS.

W. W. BIRNSTOCK.

The following tables are based on data derived from three successive heats using the average amount of material used, and the average amount of good castings obtained, there being no losses. In these heats it was found that there was an actual melting loss of 6 per cent. of the material charged. A ton (2,240 lbs.) will therefore net 2,100 lbs. of castings, and this weight is used in the following calculations.

1 ton of iron 2,240 lbs. less 6 per cent. melting loss = 2,100 lbs.

Cost of Pig Iron.		Cost of Coke.		Cost of Coal.	
When Cost of 1 ton (2,100 lbs.) is	Cost per lb.	When Cost of 1 ton (2,000 lbs.) is	Cost per lb.	When Cost of 1 ton (2,240 lbs.) is	Cost per lb.
13.50	.00642	4.00	.002	5.50	.00245
13.75	.00654	4.10	.00205		
14.00	.00666	4.25	.00212		
14.25	.00678	4.30	.00215		
14.50	.0069	4.35	.00217		
14.75	.00702	4.40	.0022		
15.00	.00714	4.50	.00225		

In the following example is used the actual figures taken from the average of the three heats.

Example: What is the cost of 11,938 lbs. castings per 100 lbs? Pig at $13.50 per ton (2,100). Coke at $4.00 per ton. Coal at $5.50 per ton. ⅛ cordwood $6.00 Using 1,584 lbs. coke, 400 lbs. coal, 12,708 pig iron.

12,708 lbs. pig at .00642 per lb	$81.585
1,584 lbs. coke at .002 per lb	3.168
400 lbs. coal at .00245 per lb	.98
⅛ cord wood at $6.00 per cord	.75
	$86.483

Then 11,938 lbs. castings cost $86.48 without molders' labor. Then 100 lbs. castings cost $.724 without molders' labor.

Table showing cost of 11,938 lbs. castings per 100 lbs., using 12,708 lbs. pig iron, 1,584 lbs. coke, 400 lbs. coal, ⅛ cordwood at different prices of iron and coke per ton, using, however, the same amount of coal and wood for bed in each instance.

Pig Iron per ton.	Coke per ton (2000 lbs.)	Castings per 100 lbs.	Pig Iron per ton.	Coke per ton (2000 lbs.)	Castings per 100 lbs.
13.50	4.00	.7244	14.50	4.00	.7755
13.50	4.10	.7250	14.50	4.10	.7761
13.50	4.25	.7260	14.50	4.25	.7771
13.50	4.30	.7264	14.50	4.30	.7775
13.50	4.35	.7266	14.50	4.35	.7777
13.50	4.40	.7270	14.50	4.40	.7781
13.50	4.50	.7277	14.50	4.50	.7788
13.75	4.00	.7372	14.75	4.00	.7883
13.75	4.10	.7378	14.75	4.10	.7889
13.75	4.25	.7388	14.75	4.25	.7899
13.75	4.30	.7391	14.75	4.30	.7902
13.75	4.35	.7394	14.75	4.35	.7905
13.75	4.40	.7398	14.75	4.40	.7909
13.75	4.50	.7405	14.75	4.50	.7916
14.00	4.00	.7499	15.00	4.00	.8010
14.00	4.10	.7506	15.00	4.10	.8017
14.00	4.25	.7515	15.00	4.25	.8026
14.00	4.30	.7519	15.00	4.30	.8031
14.00	4.35	.7522	15.00	4.35	.8033
14.00	4.40	.7526	15.00	4.40	.8037
14.00	4.50	.7533	15.00	4.50	.8043
14.25	4.00	.7627			
14.25	4.10	.7634			
14.25	4.25	.7643			
14.25	4.30	.7647			
14.25	4.35	.7650			
14.25	4.40	.7654			
14.25	4.50	.7662			

It is customary in the use of this table to add 15 per cent. to the cost of 100 lbs. of iron as given for such items as cost of cupola tender, cores, sand cleaning, buffing, etc.

For figuring the selling price of castings, the above tables are used by founders in the following manner:

Example: For what price can be furnished a casting weighing 1,242 lbs. requiring 12 hours molders' time at 30 cents per hour, prevailing price of iron $13.75 per ton (2,100 lbs.), coke $4.25 per ton (2,000 lbs.)?

1,242 lbs. at .84962 (.7388 + 15 per cent.)	$10.55
12 hours molding at .30	3.60
	$14.15
Add for office expenses in this example 15 per cent.	2.12
	16.27
To this amount add your desired profit in this example 25 per cent	4.07
	$20.34

* * *

If the writer from Troy, N. Y., who wrote referring to the note on the old Burden water wheel which appeared in the May issue, will kindly send his name and full address to the editorial office, we will be pleased to explain the matter to him by mail.

ENGINEERING REVIEW.

CURRENT EVENTS, TECHNICAL AND MECHANICAL—LEADING ARTICLES OF THE MONTH.

The *Engineering Record* says that Prof. Weyrauch, of Stuttgart, Germany, exhaustively investigated the specific heat of superheated steam over an extended range of temperature in 1876, and though it may not be generally known, he advanced proof at that date that the specific heat at constant pressure is not constant, but follows a formula of which the following is the equivalent:

$C = 0.4237 + 0.0002099\ T$, in which

$C =$ specific heat at constant pressure,

$T =$ temperature of steam in degrees F.

An interesting and perhaps valuable application of electricity is reported from the other side where it is said that the firm of Davis & Perrett, London, has used it for the separation of oil from feed water. No details are at hand save that the oily water flows through a narrow wooden trough divided into three compartments and in doing so passes between iron electrodes. A difference of potential of 50 volts is contained between the plates, and 150 volts between the three in series. The inference is that the oil collects on the electrodes, but this is not stated. The result claimed is the separation of the oil from 2,000 to 3,000 gallons of water hourly for an electrical consumption of about 20 amperes. The oil in the water was reduced from 1.07 to 0.01 grain per gallon.

The past month marked the sixtieth anniversary of the practical operation of the electromagnetic telegraph, it being May, 1844, when Prof. Morse was able to demonstrate the use of his invention in reporting at Washington the proceedings of the Whig Convention at Baltimore. The amount of service rendered to the public by the telegraph sixty years after its inception may be judged from the fact, as stated by the *Electrical World and Engineer*, that in only four or five of the leading countries, 400,000,000 or 500,000,000 messages are dispatched annually, exclusive of those handled by private lines. In this country the record is probably about 100,000,000 a year, while Great Britain does not fall very far behind. Germany and France together dispatch another 100,000,000, while Russia, Italy, Austria, and Spain will probably account for another 100,000,000.

A few illustrations of the uses of pneumatic tools in the Indian railway shops recently appeared in the *Indian and Eastern Engineer*, showing the native workmen in turbans and characteristic dress. Whatever may be the limitations of these people in the way of handling tools and machines, they apparently are not slow in the matter of boring cylinders, if having two jobs going at the same time counts. One of the views alluded to shows a double cylinder boring rig at work. The cross shaft, to which the air motor is attached, carries two worms meshing with the worm wheels upon the boring bars. Of course the construction of the British type locomotive with inside cylinders makes it more feasible to bore both cylinders at the same time, but nevertheless we think it is a job that would worry many of our American railway machinists, especially when the cylinders are hard and badly worn out of round.

It appears that the old-fashioned sport of "riding down hill" is elevated to the dignity of an art at St. Moritz in the Alps where, on a perilous toboggan slide, experts vie with one another in covering the course in the shortest possible time. Since only one toboggan can be on the slide at once, it was necessary to rig up an accurate timing arrangement that would show within one-tenth second how long was taken from start to finish. The whole arrangement is simple and is described in a recent issue of the *Electrical Review* (London). It makes use of a chronograph which is started and stopped by the breaking of cotton threads stretched across the slide at the start and finish points, these threads being connected to electric switches to make and break the current. The toboggan slide drops a vertical distance of 600 feet in a little over three-fourths mile, and it has been covered in the breath-taking time of 61 3-10 seconds for the whole course, which means a speed of over 60 miles an hour for the swiftest parts of the slide.

We have previously referred to the property of calcium carbide of quickly generating acetylene gas when immersed in water and its proposed use for compressing cotton, etc.; also its use for giving buoyancy to submarine boats. A still more novel use is that to which it is put in the Gros life belt as described in a recent consular report. The Gros life belt is composed of a series of four small, flat sacs, circular in shape and connected by a tube. The belt is worn in such a manner that it passes under the arms, and two of the pouches rest against the back, over the shoulder blades, the others, one on either side of the breast. Both ends of the tube are inclosed in small metallic cylinders, each of which contains a charge of carbide of calcium. The belt is invisible and can be worn by a passenger during an entire voyage without inconvenience and without being noticed by the other passengers. According to the experiment at La Rochelle, a man wearing a Gros life belt fell overboard and sank. He immediately arose to the surface and continued to float, head and shoulders out of the water and both arms in the air. It was estimated that only two seconds elapsed from the instant the water touched the carbide until the sacs or pouches were filled with sufficient gas to keep the man afloat.

A writer in the *Electrical Review* (London) says that one of the most important properties of mica and one on which its value largely depends in electrical manufacture, is its remarkable property of lamination, its structure in this respect being so perfect that it is possible to divide it by cleavage into leaves or sheets 0.000004 inch thick, or one two-hundred-and-fiftieth of the thickness of tissue paper. In consequence of its superior insulating property, and also the very great advance made in electrical industries, the demand for mica at the present day in almost every country is so great that the supply is almost inadequate. It is not only the superior insulating property of the mineral that gives it such an advantage, but its characteristic and peculiar structure which makes it so adaptable as an insulator requiring very little machining or shaping. For instance, it is a substance which could not be well replaced as an insulator of commutator segments, for it is not only the best but an efficient insulator under every condition. In the case of the commutator its hardness makes it invaluable, for it wears away under the friction of the brushes nearly at the same rate as the hard-drawn copper of the commutator itself. Further, the fact that heat does not alter its structure or insulating property makes it most invaluable to the electrician.

The *Locomotive* describes an explosion of a hot water boiler in a prominent club house in Hartford, Conn., which did damage to the extent of about $2,500. Fortunately, no one received severe bodily injuries, although a number were violently shaken. The boiler was supposed to be perfectly safe, as it was normally subjected to pressure of the city mains only, which is about 65 pounds. But it developed that a check valve had been put in the supply pipe between the boiler and the street to prevent hot water backing into the mains, as would occur when the kitchen fire was hard pushed and little or no hot water was used. The objection to having the hot water enter the mains was that it deteriorated the meter. The check valve stopped the hot water backing up all right, but it did the trick a little too well, as the disastrous result showed. So long as the passage between the boiler and the street main was unobstructed the pressure could never rise above 65 pounds, but when the water began to flow away from the boiler to the main the check closed and further flow was stopped, causing, of course, a great increase in pressure to be quickly generated, as there was no steam space to compress.

The moral is to put no check valves in the supply pipe of a hot water system, but if it must be done a safety valve on the boiler should by all means be supplied. This accident calls attention to the danger of shutting the street cock of any home system with a hot fire running in the kitchen range.

The origin of petroleum is a profound problem to the geologist, and while several theories have been propounded to account for its existence, none of them appears to be quite satisfactory. They mostly agree, however, that whatever the origin of petroleum, it can now be regarded as a fossil product, the same as coal, and that the supply is limited by the extent of the oil-bearing rocks in the earth and their contents. In view of the probable future extinction of coal and petroleum deposits, these theories being considered, that of Mr. Eugene Coste, as expressed at the February meeting of the American Institute of Mining Engineers, is more optimistic, as holding that the production of petroleum is volcanic, and is going on at all times. Mr. Coste points out that wherever oil-bearing rocks are found there are abundant evidences of volcanic action—not necessarily craters, but ruptures and fissures of the earth's crust. In the Texas oil fields the manifestations of volcanic action take the form of small mounds or hills that have been raised above the general level by great internal pressure. If oil was forced from, say, the Spindle Top wells by hydrostatic pressure, as some believe, water should flow from the bores after the oil has ceased to flow, but such is never the case. Mr. Coste believes that oil and gas are only to be found along the fissures and lines of structural weakness in the earth's crust; he is plotting a map of United States and Canada, showing the probable location of these lines, and therefore of probable oil deposits hitherto unsuspected. The study of the volcanic theory may lead to the discovery of a synthetic method for producing oils.

The *Engineering News* calls attention to the desirability of manufacturers sending copies of their trade literature to great public libraries for filing. The Astor branch of the New York Public Library has already accumulated over 30,000 pieces of trade literature and the director is anxious for all manufacturers to put the library on their mailing lists to receive future issues. It appears that some manufacturers are adverse to putting their catalogues and trade literature on file in libraries, for what reasons it is difficult to understand. "The initial purpose of these trade catalogues is to advise the public of the general or detailed character of the products manufactured and the place where and the price at which these products can be secured. While the manufacturers spread this information among those whom they deem to be possible purchasers, they should remember that this last is an unknown quantity, and much good may result to the dealers from sources unexplored in their personal effort. Another good reason why all manufacturers and dealers should do all that lies in their power to make such a collection as complete as human agency can make it, is the value to themselves of such a collection, intelligently classified and made accessible. It is of great profit to any manufacturer to know just what is being done in similar lines by competitors in business. The ostrich-policy of attempting to keep to himself what some mis-call "trade secrets" is antiquated, and serves no useful purpose in this day of wide publicity. And real and valuable trade secrets are not inserted in catalogues. The fact that these catalogues are generally looked upon as merely serving a passing purpose and are rarely preserved in the manufacturer's own office for any length of time, is an added inducement for sending them to an institution that will preserve them and make them useful to all interested searchers after information."

UNTAXED DENATURIZED ALCOHOL.

The announcement by the Republican leaders of Congress that the question of removing the internal revenue tax from denaturized alcohol for industrial purposes would be taken up at the next session as a subject of unmistakable public policy, has awakened anew the interest of automobile manufacturers and operators in the possibilities of this product as a substitute for gasoline. Frequent letters on the subject are being received by the lawyers representing the committee of manufacturers who are co-operating in the action for an untaxed alcohol for the arts, and it is hoped that an automobile representation may be enlisted with the organization. In addition to the Boutell bill, a measure, which covers some details not specified in the other bill, has been drafted by the Commissioner of Internal Revenue at the request of Chairman Payne, of the Ways and Means Committee. The attorneys for the manufacturers' committee have received word that the English Parliament will be urged to enact a measure that will grant the same exemption from taxation to alcohol as provided by the Boutell bill. According to an estimate by Dr. Wiley, of the United States Department of Agriculture, alcohol suitable for generating power in automobiles could be sold as low as fifteen cents a gallon, if the internal revenue tax were removed. Manufacturers of alcohol believe this estimate too low, but state that the cost of the product for automobile use, under the favorable conditions of a removal of the tax, would be from twenty to twenty-five cents a gallon. With the cost of alcohol for this purpose established on a parity practically with that of gasoline, the advocates of the measure in question are urging the advantages of alcohol over gasoline as a motor fuel. These are summed up as follows: Freedom from danger, absence of disagreeable odors, possibility of using high compression, low initial heat and discharge of exhaust gases at relatively low temperature, less sudden and more prolonged explosion, more reliable ignition and combustion. It is claimed that by hydrating the alcohol a still higher compression can be used, and thus a larger fraction of the heat of combustion converted into useful work.—*Horseless Age.*

MOTOR OMNIBUS VS. STREET RAILWAYS.

A recent report from the United States consul at Edinburgh, Scotland, quotes from an address by Mr. John Stirling, of Granton, which endeavors to make out a strong case for the motor omnibus as opposed to the street car running on rails. The quotation reads as follows:

"There is no doubt that the early tramways served a useful purpose and there was probably a reasonable excuse for the desire to have a smooth surface on which to convey large numbers of the citizens, having regard to the general condition of streets in large towns and cities at that time and for a number of years after. The idea that tramways were a necessity took hold of many minds, but I venture to oppose this idea and to say that they are now no longer a necessity, so far, at any rate, as Scottish cities and large towns are concerned, nor are they now the most satisfactory or economical method of moving the population of great centers from place to place. Tramways, with their huge cars, constitute a perpetual street obstruction. They run on their fixed lines and all other traffic must make way for them. As time goes on, the congestion and attendant street dangers will multiply, unless a remedy be found—and a remedy must be found. Alongside the growth and development of electrical engineering, and especially that department of it relating to locomotion, there has been arising and advancing steadily a new competitor, which promises to become at no great distance a serious rival to the tramways. This is the evolution and perfecting of the motor omnibus. It is possible that those interested in tramways may smile at such a prediction, but I make it in all seriousness; the self-propelled omnibus will be adopted in many places instead of tramways, and will yet displace existing tramways in crowded cities. The mobility of the motor omnibus will be an important factor in its success in traffic. It can be run and maneuvered in a way quite impossible in the case of a tram car. A motor-omnibus service is free from the great disadvantage of a tramway service depending upon its power from a central power station. There is no doubt now that the recent improvement in motor omnibuses has made them a thoroughly commercial proposition, and I believe the time has arrived when something should be done to make this fact more widely known than it is."

While there is a certain element of advantage in the motor omnibus idea, it seems to us that its disadvantages overwhelmingly offset it. The fact that street cars are confined to a track and must proceed in an orderly manner and in sequence, gives them a far greater carrying capacity ordinarily than would be possible if each car was able to proceed independently of the others. Think of the vast confusion and danger in narrow streets if the present street railway traffic was attempted by independent cars. The cost of traction would be far above that on steel rails, and the danger to life and limb is something appalling to even think of.

THE PRINCIPLE OF THE PUMP.

Extract from Paper, "Pumps and Pumping Machinery," read by Mr. G. F. Ahlberg before the December, 1903, Meeting of the Engineers' Society of Western Pennsylvania.

Although the pump was invented about 150 B. C., it was not until the beginning of the seventeenth century that its true principles were understood, it being generally thought to act by means of a force called suction, though no attempt to discover the reason why water rose upward under a piston was made until the time when a pump-maker to a royal duke in Italy complained that the water would not rise higher than 32 feet or thereabouts. Galileo was applied to for a solution, but does not seem to have solved the question. His pupil, Torricelli, considered that the atmospheric pressure might be counterpoise to the 32 feet of water when received into vacuum. The experiment was tried in 1643, and the supposition was found correct and confirmed later by Pascal. From this experiment emanated the discovery of the barometer.

A singular incident happened to a man of Seville who undertook to raise water from a well 60 feet deep by a common pump. Instead of making the sucker play within 30 feet of the water, he made the rod so short that it did not reach within 50 feet of it. As a necessary consequence he could not raise any water. Being greatly disappointed, he descended the well to examine the pipe, while a person above was employed in working the pump, and at last, in a fit of despair, he dashed his hammer violently against the pipe. By this act a small opening was made in the pipe about 10 feet above the water, when the water ascended at the spout. This fact being published in 1776 led to a reinvestigation of the subject, and instead of overthrowing the received doctrine of atmospheric pressure, more fully confirmed it. It was ascertained that the air on entering the pipe became mixed with water, which therefore, instead of being carried up in an unbroken column, was raised in disjointed portions, or in the form of thick rain. The mixture being much lighter than water alone, a longer column of it can be supported by the atmosphere, and by proportioning the air a column of the compound fluid is admitted which may be elevated 100 to 200 feet.

[It is this condition that exists in the so-called Pohle air-lift; the compressed air entering the bottom of the well forms a column of air and water that is lighter than the solid column of water outside the lift pipe. Hence the water and air rise to the surface.—EDITOR.]

SIMPLE METHOD OF TESTING ELECTRIC MOTORS FOR SYNCHRONISM.

A correspondent of the *Engineer* (Chicago) tells of a simple method employed by him to determine how nearly two 220-volt, direct-current motors of the same type ran in synchronism. With speed indicators the approximate number of rotations per minute of each motor could be found, but it was desired to discover whether in, say, one minute one armature had turned one-fourth rotation more than the other. To determine this both motors were placed as shown in the sketch, Fig. 1, that is, so that the disks on the ends of the shafts were

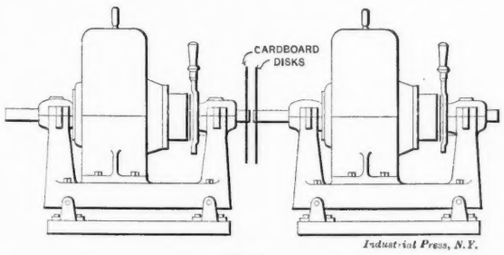

Fig. 1.

as close together as possible. The disks were of heavy cardboard and about 16 inches in diameter. In each disk were cut four curved slits about ⅛ inch wide, as shown in Fig. 2.

The motors were connected to the circuit so as to revolve the disks in the same direction. Then by looking at the side of one disk and holding a light back of the other, a ring of light was seen at the points of intersection of the slits. This can be understood by referring to Fig. 3. The ring of light will appear at the intersection of the curved slits at a distance equal to *A B* from the center. In the drawing at the right, one disk has revolved one-eighth revolution, and the points of intersection have moved out to *A′* and consequently the ring of light will appear at the distance *A′ B′* from the center, and a new ring will appear at *C*. These rings will form at the circumference and move toward the center, or they will form at the center and move outward according to which motor is running the faster, but if the ring appears stationary then both armatures must be running at exactly the same speed.

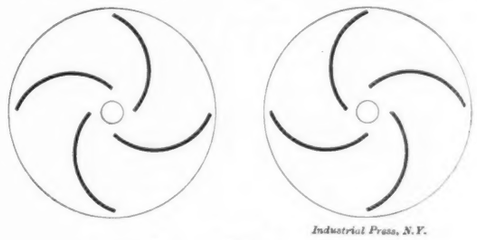

Fig. 2.

With a slide wire rheostat in the shunt field of one motor,

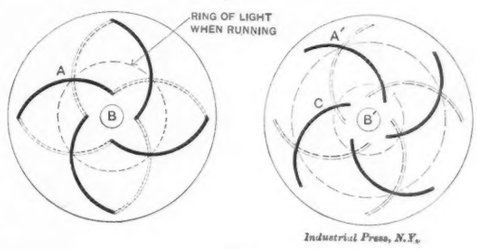

Fig. 3.

it was possible to cause the ring of light to remain stationary as long as the voltage did not vary. A slight variation in the voltage would cause the ring of light to move one way or the other, on account of the difference in speed of the two motors.

THE ACTION OF RADIANT HEAT.

Electrical Review, April 15, 1904, Page 619.

A novel theory of radiant heat is hinted at by a contemporary, which has, indeed, with a certain consistency, long held forth views in regard to radiant heat that would appear to be somewhat subversive of accepted theories of energy. The view taken is illustrated by the following example, which is put forward as having been actually tried and proved. At least, so we interpret the assertion as to what would happen should the experiment be repeated. This experiment is as follows or on these lines:

Take two pieces of heated iron of equal weight and temperature. Place one of them inside a small water-jacketed box, and the other inside a large jacketed box. When the iron in each case has cooled through, let us say, 1,800 degrees F., or any other range of temperature, more heat will be found to have entered the water surrounding the small than the large box, the reason being that the iron is nearer to the surface to be heated in one box than it is in the other. Yet no heat can have escaped in either case, on the assumption that the box being closed, all heat has been intercepted by the enclosing water boundary, and distance should not have had any effect. Heat rays, as we may still term the radiant emanation which we know as heat, may be represented as lines of force, and temperature is simply a function of the lines of force, many lines in a given area corresponding with high temperature and *vice versa*. Obviously, in a closed box, the surface to be heated is exposed to the higher temperature, as it is nearer the source of heat. But this does not, of course, explain the absolute disappearance of energy in one case and not in another. Experiments which show this disappearance of energy must always be looked on with some suspicion. Were proper corrections made? A large box loses heat by radiation to a much greater extent than one of smaller size, and errors may easily creep in from this cause alone.

If it be proved, however, that with all calculations energy really has disappeared, then it follows that low temperature radiant heat, or that quality of radiation which has few lines of force per square centimeter, has the power of passing through certain substances, such as iron plate or water, more readily than have the more concentrated rays. Water and iron plate are, in fact, diathermanous to radiant heat, possibly in a certain ratio to the surface exposed to it, and thus arises the advantage of small surfaces and contiguity of the hot body to such surfaces.

Another illustration of the claimed phenomenon is, that large locomotive fire boxes have failed where they ought to have been a success, and this is held to be accounted for by the greater distance from the walls of the box of the source of radiation. We are not satisfied that our contemporary has proved its claim. If true, they ought to be capable of clear and unmistakable proof, and there should be means, also, of discovering whether the escaping radiant heat is outside the large box to the extent of the missing quantity. If neither in the box nor in the jacket water, nor escaping in some other guise, then, indeed, would the theory of energy have been shattered like a clay idol. From the tone of our contemporary, two exactly similar boilers, except for the size of the fire box above the fire level, should show different evaporative effects; yet the boiler which produced the least steam would not reject its gases any hotter. The point is important, for we are being asked to believe that a certain portion of the heat of fuel disappears simply by virtue of passing a few additional inches through space. The lay mind is always liable to become confused as between heat and temperature, and probably no better explanation can be given of temperature than that embodied in the idea of concentration of lines of force.

The common lens or burning glass, which collects what appears to us as but the genial and pleasant warmth of the too infrequent sun, will focus these rays to a point of heat intensity that will fuse the most intractable of substances. Yet beyond the focal point the same original rays will reappear with no such intensity. Temperature is then clearly a concentration effect, and it is very difficult to believe that want of concentration has altered the properties of radiant rays. Something certain, with positive proof, is demanded; mere vague claims and statements unsupported by experimental proof cannot be accepted.

DILATATION OF IRON AND STEEL AT HIGH TEMPERATURES.

Communication presented to the Academie des Sciences by Prof. H. Le Chatelier, and translated from the French by Charles A. Brassler.

The dilatation of steel at elevated temperatures has not been studied very carefully except by Prof. Svedelius, of the University of Upsala; but in the experiments of this scientist the variations of temperature have been so rapid that some doubts may exist on the exactness of the numbers obtained. I have taken up the study of the subject with the collaboration of M. Chartepic, chemical *preparateur* in the School of Mines. We have made use of the method of measuring employed by M. Coupeau in his researches on the dilatation of ceramic pastes. A mirror of cast silicon is inclined more or less, according to the difference of dilatation, between a support of Sèvres porcelain and the body studied; it reflects a luminous ray, of which the angular displacement is measured.

In the dilatation of iron and steel three periods must be distinguished; the first corresponds to temperatures lower than that at the beginning of the molecular transformations; the last to temperatures higher than the close of these transformations; between the two is the period of these transformations.

Dilatation at Low Temperatures.—The iron which I have used is a casting of the following composition: C. 0.057; Mn 0.13; Si 0.05. The following table is deduced from the average curve in a great number of experiments. The dilatations are expressed by taking one-hundredth of the initial length of the rod, that is to say, a millimeter for a rod of 100 millimeters. The last line of the table gives the true coefficient of dilatation for each interval of temperature of 100 degrees C.

Temperature, deg...	0	100	200	300	400	500	600	700	800
Dilatation		0.11	0.23	0.36	0.50	0.65	0.81	0.975	1.125

The tests made with steels properly so called, that is to say, a metal richer in carbon, give numbers essentially the same. The composition of the steels studied is here given:

	1	2	3	4	5	6
Carbon	0.205	0.49	0.84	1.21	0.80	0.75
Manganese	0.15	0.24	0.24	0.24	0.15	0.15
Silicon	0.08	0.05	0.14	0.14	0.06	0.06

The dilatations are added to those given for iron:

Temperature, deg.....	0	100	200	300	400	500	600	700
Soft iron		0.11	0.23	0.36	0.50	0.65	0.81	0.975
Steels 1, 2, 3, 5, 6.....		0.11	0.22	0.35	0.495	0.64	0.81	0.975
Steel 4		0.105	0.22	0.35	0.50	0.64	0.80	0.96

The differences between the dilatations of these different metals do not exceed 0.01 millimeter, which corresponds to the limit of precision of the experiments. It may therefore be stated that irons and steels have essentially identical coefficients of dilatation, in the neighborhood of 0.000011 at the ordinary temperature, and increasing regularly up to 758 degrees C., where the true coefficient is 0.000017. The average coefficient between 0 degree and 750 degrees is therefore 0.000014.

This close identity of the coefficients of dilatation is explained by what is known of the constitution of steel. It consists of a preponderating mass of pure iron, in which are distributed a small quantity of crystals of the carbide Fe^3C. At least four-fifths of the iron is in an uncombined state; it is therefore natural that steel should preserve nearly the dilatation of the pure metal.

Dilatation at Elevated Temperatures.—Above temperatures of molecular transformation, the dilatation of different steels varies very rapidly with their percentage in carbon.

This result agrees perfectly with the facts we possess in regard to the constitution of steel. Above the molecular change ferric carbide and iron constitute together a solid solution; in similar cases, as I have previously shown, the dilatation has not necessarily any relation with those of the constituents; it may be much higher than theirs.

Period of Transformation.—It has been impossible for me to realize molecular transformations under strictly reversible conditions; on this point, my experiments are no more satisfactory than those of Prof. Svedelius. I present the results as only provisional, intending to return to this subject in the future.

Percentage of carbon	0.05	0.20	0.5	0.8	1.21
Average temp. of transf., deg...	840	768	728	730	725
Extent of contraction	0.26 mm.	0.23 mm.	0.21 mm.	0.08 mm.	0.10 mm.

The contraction is expressed in millimeter fractions and applied to a length of 100 millimeters.

These contractions are very irregular from one experiment to another, and are often followed by dilatations which compensate them partially. A large number of these anomalies might be explained by supposing that this change is the result of two successive phenomena; one, the molecular conversion of the iron, which is accompanied with a contraction of 0.26; the other the dissolution of the ferric carbide in this transformed metal, which would be accompanied with a dilatation, the extent of which would be also 0.26 for a percentage of carbon of about 0.9.

THE MANUFACTURE OF PIPE.

Abstract of Paper read by Victor Beutner before the Engineers' Society of Pennsylvania, December 15, 1903.

The earliest method of manufacturing tubes was that employed by gunsmiths from the invention of fire arms until the first quarter of the last century. A piece of flat iron is bent around a mandrel, and the overlapping edges are brought to a welding heat, a few inches at a time, and welded by blows of a hammer. For the hand hammer of the earlier smiths a helve or trip hammer was substituted.

When with the introduction of gas and steam the demand for tubes increased greatly, it became necessary to insist on a greater uniformity than could be obtained in hand welding, and in 1824 James Russel passed the hand welded tubes

through a set of rolls and over a mandrel, thereby obtaining the proper inside and outside diameter of the tube. James Russel further established the fact that a sufficiently strong joint can be obtained by forcing the ends of the skelp against each other, instead of overlapping them, as had always been done previously. This fact led directly to the introduction of the new methods of butt welding pipe, which are still in use in practically their original form. James Whitehouse, in 1825, took out a patent covering the following process: A piece of skelp of suitable width is bent until the two edges nearly meet. One-half of this bent skelp is inserted in a furnace and brought to welding heat. The cold end is fastened in a suitable manner to the traveling chain of a draw bench. The two halves of a ring-shaped die are closed together by a pressure screw; the chain is started and the heated portion of the skelp drawn through the die. The diameter of this die is a trifle smaller than the outside diameter of the skelp, and the pressure exerted is sufficient to

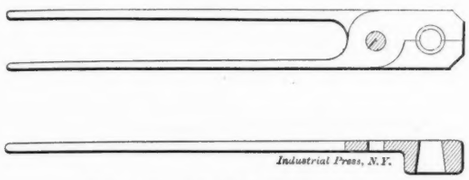

Fig. 1. Tongs for Butt Welding Pipe.

close the joint of the skelp by welding the edges together. Then the half welded pipe is reversed, and the other end finished in the same way. The pressure screw used to force the two halves of the die together soon proved far too slow and tongs were used, shaped as shown in Fig. 1, the jaws of which formed the dies, and could be quickly opened and closed. The draw bench was provided with a steadying rest against which the tongs were rested while the tube was drawn through.

Very soon a most important improvement was made in the manufacture of butt welded pipe. A solid die, usually called a bell, was employed, and it was found possible to bend and weld the skelp in one operation, by first clipping the corners of the skelp, and by employing suitably constructed tongs, which gripped the skelp very firmly, yet were small in diameter and could pass through the opening of the bell, Fig. 2. This method, usually called the bell weld method, has found a very large field, owing to its simplicity and cheap-

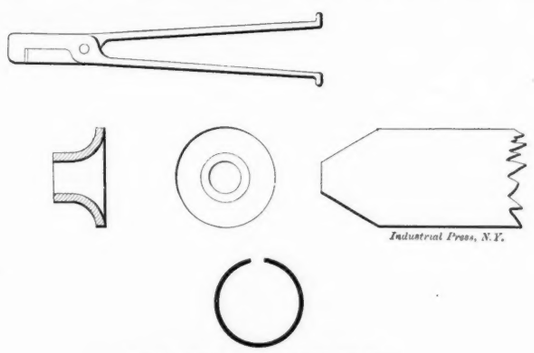

Fig. 2. Butt Welding with the Bell.

ness. The strength of such butt welded joint is also very remarkable. I have seen 1-inch pipe, made by this method, tested to 1,000 pounds per square inch hydrostatic pressure, and the thickness of metal of 1-inch standard pipe is little more than ⅛ inch. The limitations of the bell weld methods are self-evident. When either a very great resistance to inside pressure is required, or when it is essential to keep the thickness of metal down, it is impracticable. The skelp of large pipes has the tendency to collapse, instead of filling the bell, and although I have seen 4-inch pipe made successfully, the usual commercial limit for this process is 2 inches, or, at most, 2½ inches. The smaller sizes, say below ⅜ inch, present another obstacle, since the gripping tongs must pass through an opening of the bell, which is too small to allow of their proper strength of construction. In this case, the tong process described above is employed, while in all the other cases the lap weld method must be resorted to.

This method dates back in all its essential features to about 1840, when it appears that both the Russels and a man named Martin Jones took out patents covering it. In this method the skelp, previously bent in a manner that one edge overlaps the other, is heated to a welding heat, and im-

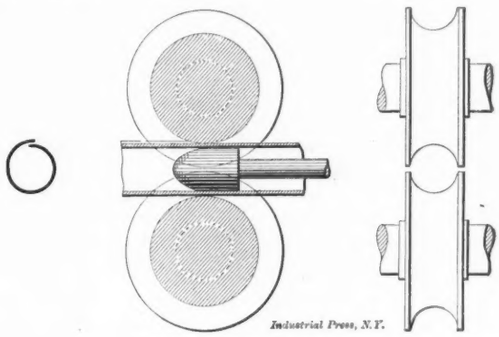

Fig. 3. Lap Welding Pipe.

mediately passed through the grooves of rolls and over a mandrel. Through the pressure between the upper roll and mandrel, usually called ball, the two overlapping edges are united, as in Fig. 3.

Although not altogether within the scope of this talk, it might prove interesting to have the most important method

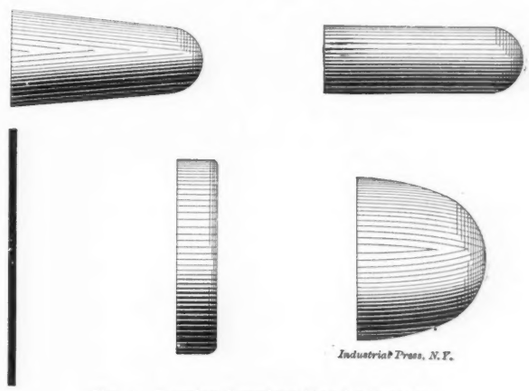

Fig. 4. Forming Seamless Pipe by Drawing.

of manufacturing seamless tubes discussed briefly. The oldest and simplest method is the rolling or drawing out of a billet, which has been previously pierced by forcing a punch through its center while in a red-hot state. Another method is illustrated by Fig. 4. Through a number of successive operations a flat sheet of metal is cupped, the depth of this

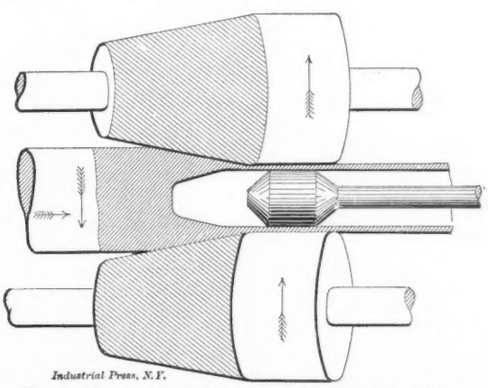

Fig. 5. Mannesman Process of making Seamless Tubing.

cup increasing with each operation. Lastly the bottom is cut off, and, if desired, the tube may be finished by drawing. A patent taken out some fifteen years ago provides for the casting of small ingots with a core of powdered refractory material, which hollow ingot is again finished as above.

Quite a startling innovation, however, was embodied in the

principle of diagonal rolling, as covered by a number of patents awarded to the brothers Mannesman in 1885 and 1886. This principle can be carried out in a number of ways, of which Fig. 5 and Fig. 6 are representative instances. It can be readily seen from the sketches that the rolls impart a rotary or whirling and a forward motion to the piece. In the arrangement shown in Fig. 5 this forward motion is caused by the inclination of the axes of the conical rolls in relation to each other, while in Fig. 6 the rolled piece is introduced not quite on line with the axes of the mushroom rolls. An altogether satisfactory explanation for the remarkable results of this method is hard to give. It seems that the material instead of flowing in a longitudinal direction, as in the ordinary rolling, has a tendency to flow outward toward its circumference, owing to the rotary motion, a distinct displacement of the fiber taking place. This fact is shown clearly in Fig. 6, where the resulting tube has a larger diameter than the original billet. The mandrel shown in both cases has nothing to do with the formation of the hole, and only serves to smooth the inside of the tubes.

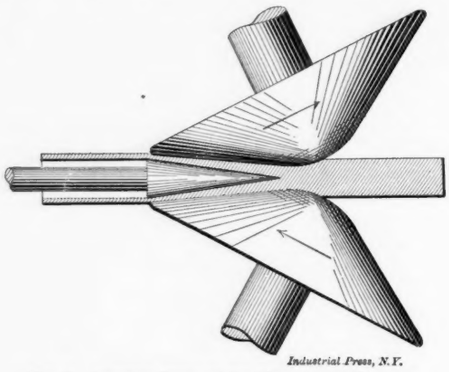

Industrial Press, N.Y.

Fig. 6. Another Form of the Mannesman Process.

In the Stiefel process, patented in 1895 and shown in Fig. 7, a heated billet is passed between the faces of two parallel disks, which impart to it a rotary and a forward motion, forcing it thereby against and over a piercing mandrel. The working faces are shaped in such a manner as to cause a uniform speed of rotation, and thus the parallel longitudinal arrangement of the fibers is not disturbed.

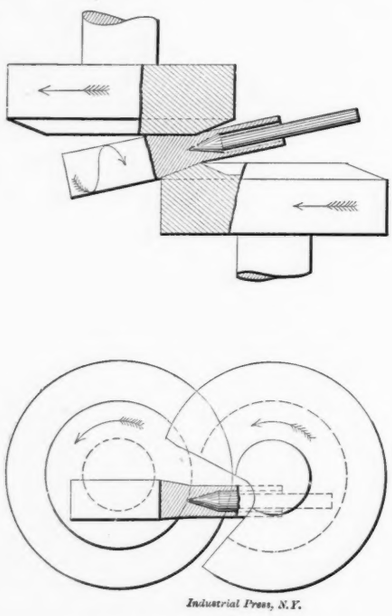

Industrial Press, N.Y.

Fig. 7. Stiefel Process.

In the Ehrhardt process a piercing bar is forced into a solid billet, the cross section of which corresponds with the area of the tube to be produced. This billet, heated to white heat, is placed in a form, which corresponds to the outer shape of the tube. The difference of the area of this form and of the area of the billet must be equal to the area of the piercing bar. The metal forced from its center flows to the outside, taking up the space between the original billet and the form, which is equal to the amount of material displaced by the piercing bar.

As to the comparative merits of the seamless drawn and the ordinary welded pipe, the first certainly presents a highly interesting subject from a technical standpoint, and through the ample discussion of the various methods in scientific bodies and the advertising derived from its use for boilers, or other tubular appliances, the seamless tube has gained quite a notoriety, but of all the wrought pipe manufactured to-day, 95 per cent., and probably even considerably more, is made by either the butt or lap weld method. The great difference in the cost of manufacture and the fact that although seamless pipe might be better, the ordinary welded pipe is amply good enough for all but exceptional cases, are the obvious reasons for this fact.

COST OF MILL BUILDINGS.

Proceedings of the New England Cotton Manufacturers' Association.

The accompanying diagrams and explanation of same were presented by Mr. Chas. T. Main, the mill engineer, at the April meeting of the N. E. Cotton Manufacturers' Association. The mill type of construction is so well adapted for machine shops, when the product consists of small machinery or parts of machines, and especially where land is valuable, as in cities, that we think the diagrams will be appreciated by readers of MACHINERY who are interested in shop building, or in the appraisal of shop property.

It is not an uncommon thing to hear the cost of mill buildings placed from 60 to 80 cents per square foot of floor space, regardless of the size or number of stories. There is, however, a wide range of cost per square foot of floor space, depending upon the width, length, height of stories and number of stories.

We recently placed a valuation upon a portion of the property of a corporation, including some 400 or 500 buildings. In order to have a standard of cost from which to start in each case, we prepared a series of diagrams showing the approximate costs of buildings varying in length and width, and from one story to six stories in height. The height of stories also was varied for different widths, being assumed 13 feet high if 25 feet wide, 14 feet if 50 feet wide, 15 feet for 75 feet, 16 feet for 100 feet and over.

The costs used in making up the diagrams are based largely upon the actual cost of work done under average conditions of cost of materials and labor, and with average soil for foundations.

The costs given include plumbing, but no heating or sprinklers.

Use of Diagrams.

1. The diagrams can be used to determine the probable approximate cost of proposed brick buildings to be used for manufacturing purposes, and these can be taken from the diagrams readily. For example, if it is desired to know the probable cost of a building, 400 feet long by 100 feet wide by 3 stories high, refer to the sheet showing the cost of three story buildings. On the curve for buildings 100 feet wide, find the point where the vertical line of 400 feet in length cuts the curve, then move horizontally along this line to the left hand vertical line, on which will be found the cost of 66 cents. For present prices of materials and labor, add about 5 per cent., making the total about 70 cents per square foot.

The cost given is for brick manufacturing buildings under average conditions, and can be modified if necessary for the following conditions.

a. If the soil is poor or the conditions of the site are such as to require more than the ordinary amount of foundations, the cost will be increased.

b. If the end or a side of the building is formed by another building, the cost of one or the other will be reduced.

c. If the building is to be used for ordinary storage purposes with low stories and no top floors, the cost will be decreased about 10 per cent. for large low buildings to 25 per cent. for small high ones, about 20 per cent. usually being fair.

d. If the buildings are to be used for manufacturing purposes and are to be substantially built of wood, the cost will be decreased about 6 per cent. for large one story buildings to 33 per cent. for high small buildings, and 15 per cent. would usually be fair.

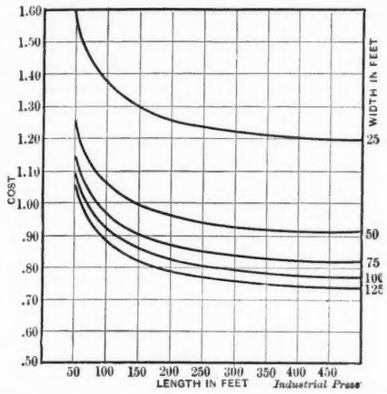

Fig. 1. Diagram showing Estimated Cost of Manufacturing Brick Buildings, one Story High, per Square Foot of Gross Floor Space.

e. If the buildings are to be used for storage with low stories and built substantially of wood, the cost will be decreased from 13 per cent. for large one-story buildings to 50 per cent. for small high buildings, and 30 per cent. would usually be fair.

f. For office buildings the cost must be increased according to the finish.

The cost of very light wooden structures is much less than the above figures would give.

Basis of Estimates.

The following table shows the costs which form the basis of the estimates, and these unit prices can be used to compute the cost of any building not covered by the diagrams.

PRICES AND OTHER DATA USED FOR ESTIMATING THE COST OF BRICK BUILDINGS.

	Foundations, including excavations. Cost per lin. ft.		Brick Walls. Cost per sq. ft. of surface.		Columns including Piers and Castings.
	For Outside Walls.	For Inside Walls.	Outside Walls.	Inside Walls.	Cost of one.
One Story Building.	1.75	1.50	.33	.40	12.00
Two " "	2.50	2.00	.37	.40	12.00
Three " "	3.25	2.50	.40	.40	12.00
Four " "	4.00	3.00	.43	.40	12.00
Five " "	4.80	3.50	.46	.40	12.00
Six " "	5.80	4.00	.50	.40	12.00

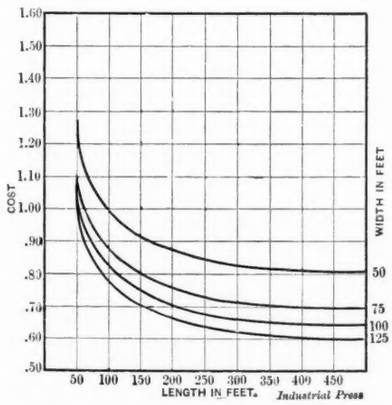

Fig. 2. Same as Fig. 1, but for Three Stories.

Assumed Height of Stories.

From ground to first floot, 3 feet.

Buildings, 25 feet wide; stories, 13 feet high.

Buildings, 50 feet wide; stories, 14 feet high.

Buildings, 75 feet wide; stories, 15 feet high.

Buildings, 100 feet wide; stories, 16 feet high.

Buildings, 125 feet wide; stories, 16 feet high.

Floors, 25 cents per square foot of gross floor space.

Roof, 20 cents per square foot. Roof to project 18 inches all around buildings.

Stairways, including partitions, $100 each flight.

Allow 1 stairway and one elevator tower for buildings up to 150 feet long.

Allow 2 stairways and one elevator tower for buildings up to 300 feet long.

Allow 3 stairways and one elevator tower for buildings over 300 feet long.

Plumbing, $75 for each fixture including piping and partitions.

Allow 2 fixtures on each floor up to 5,000 square feet of floor space and add 1 fixture for each additional 5,000 square feet of floor or fraction thereof.

The cost of brick walls is based on 22 bricks per cubic foot, costing $15.00 per thousand laid. Openings are estimated at 33 cents per square foot, including windows, doors and sills.

Ordinary mill floors, including timbers, planking and top floor, with Southern pine timber at $30.00 per thousand foot board measure and spruce planking at $20.00 per thousand, cost about 25 cents per square foot, which has been used as a unit price.

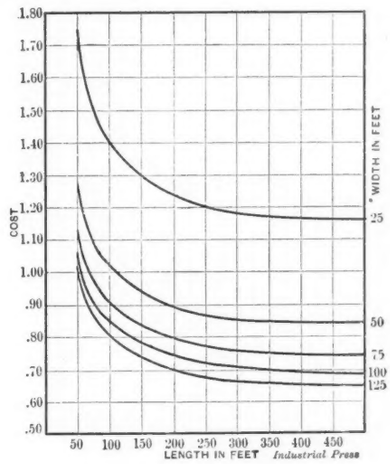

Fig. 3. Same as Fig. 1, but for Six Stories.

Ordinary mill roofs covered with tar and gravel, with lumber at the above prices, cost about 20 cents per square foot, and this has been used in the estimates.

Add to above for stairways, elevator wells, plumbing, partitions and special work.

The present prices for materials and labor would increase the cost as shown on the diagrams about 5 per cent.

Deductions from Diagrams.

1. An examination of the diagrams shows immediately the decrease in cost as the width is increased. This is due to the fact that the cost of the walls and outside foundations, which is an important item of cost, relative to the total cost, is decreased as the width increases.

For example, supposing a three-story building is desired with 30,000 square feet on each floor.

If the building were 600 feet by 50 feet, its cost would be about 80 cents a square foot.

If the building were 400 feet by 75 feet, its cost would be about 71 cents a square foot.

If the building were 300 feet by 100 feet its cost would be about 68 cents a square foot.

If the building were 240 feet by 125 feet, its cost would be about 66 cents a square foot.

2. The diagrams show that the minimum cost per square foot is reached with a four-story building. A three-story building costs a trifle more than a four-story. A one-story building is the most expensive. This is due to a combination of several features.

a. The cost of ordinary foundations does not increase in proportion to the number of stories, and therefore their cost is

less per square foot as the number of stories is increased, at least, up to the limit of the diagrams.

b. The roof is the same for a one-story building as for one of any other number of stories, and therefore its cost relative to the total cost grows less as the number of stories increases.

c. The cost of columns, including the supporting piers and castings, does not vary much per story as the stories are added.

d. As the number of stories increase, the cost of the walls, owing to increased thickness, increases in a greater ratio than the number of stories, and this item is the one which in the four-story building offsets the saving in foundations and roof.

3. The saving by the use of frame construction for walls instead of brick is not as great as many persons think. The only saving is in somewhat lighter foundations and in the outside surfaces of the building. The floor, columns and roof must be the same strength and construction in any case.

CONCERNING THERMOMETERS.

The Locomotive, December, 1903, Page 191.

Thermometers of all grades may be bought in the market, ranging from those that are suitable for decorative purposes and whist favors to those that are used for accurate scientific purposes. In the present article we shall speak only of "ordinary" thermometers, such as may be bought for from twenty-five to fifty cents, and which serve as the bases of the familiar controversies that arise in unusually cold or hot weather, among amateur meteorological observers.

A thermometer consists of four distinct parts—the stem, the bulb, the enclosed mercury (or other fluid), and the scale on which the degrees are marked. In the manufacture of the stem a quantity of glass about the size of a peach pit is taken upon the end of a glass worker's blowpipe, and blown up until it is about 2½ inches in diameter and elliptical in form. This is dipped again into the glass crucible, so that it gathers more glass, and the blowing continues. After a time another workman attaches his blowpipe to the bottom of the mass, and the two men, both blowing, move away from each other so as to draw the bulb out into a long, fine tube, which is frequently as much as three hundred feet in length. The capillary tube thus prepared is cut into lengths, and reheated in an annealing oven, so that it may be straightened and also relieved of the internal stresses due to its original cooling. When a considerable number of lengths have been accumulated in this way, the diameter of the bore is measured in each specimen by the aid of a microscope, and the tubes are sorted out accordingly.

In the manufacture of a thermometer, a piece of this capillary tubing of the proper length is first selected, and to one end of this a piece of semi-molten glass of a special kind is attached, air being then forced through the capillary tube until the glass so attached is blown out into a bulb of the proper size. While the bulb is still hot, and the air in it is therefore rarefied by expansion, the open end of the stem is dipped into mercury, and as the heated glass cools the mercury is drawn up through the stem until it partially fills the bulb. The bulb is then heated again, and the operation is repeated until both the bulb and stem are completely filled. The bulb is then heated to a temperature a few degrees above the highest temperature which the thermometer is intended to measure, and when the mercury ceases to overflow at the open end the capillary tube is sealed in the flame of a blowpipe. The glass and mercury parts of the instrument are then complete, and it remains to attach a suitable scale.

The ideal way to graduate a thermometer scale is as follows: The thermometer is first placed in the steam arising from water that is boiling freely under normal atmospheric pressure, and the point to which the mercury rises is marked (for a Fahrenheit thermometer) "212 degrees." The instrument is then placed in a mixture of water and pulverized ice, and the point to which the mercury sinks is marked "32 degrees." The space between these two marks is then divided into 180 equal divisions, which are called degrees. If the thermometer is not intended to measure such a wide range of temperature, the same idea can be carried out by comparing the instrument, at any two convenient temperatures whatsoever, with a standard instrument which has been previously graduated in the manner described.

LOCOMOTIVE TESTING PLANT AT THE LOUISIANA PURCHASE EXPOSITION.

Bulletin No. 2, issued by the Pennsylvania Railroad Company.

The Pennsylvania Railroad System has been assigned a space in the Transportation Building of the Louisiana Purchase Exposition, three hundred feet in length and ninety feet in width, a portion of which will be devoted to a locomotive testing plant. Located in the second bay from the south side of the building and facing one of the wide entrances of its western exposure, this space is easily accessible for the locomotives which will be tested. The general arrangement of the plant is shown in Figs. 1, 2 and 3, in end elevation, side elevation and in plan. The letters designating the essential parts are the same on each cut.

The locomotive under test is carried on supporting wheels whose axles are extended to receive absorption brakes. The turning of the driving wheels causes the supporting wheels to revolve, but these are retarded by the brakes to any extent desired. The work actually done by the locomotive consists in overcoming the frictional resistance of the supporting wheels and brakes, the resulting force exerted at the drawbar being measured by a traction dynamometer. The upper faces of the supporting wheels *J* are at the level of the tracks and of the floor of the building, with a pit of sufficient depth for these wheels and their supports. The base of the plant consists of two longitudinal bed plates, *A*, of cast iron, secured to concrete foundations of ample depth for the weight to be carried, and to resist the shocks transmitted from the locomotive driving wheels when revolving at high velocities. The bed plates are provided with T-slots running longitudinally, and by means of suitable bolts the pedestals *B* are secured to them, thus permitting adjustment lengthwise, in order that the supporting wheels may be located to correspond with the spacing of the driving wheels of the locomotive to be tested.

There will be two sets of supporting wheels, one consisting of three pairs, 72 inches in diameter, for use under passenger types of locomotives having large driving wheels, and one set of five pairs, 50 inches in diameter, to be used under locomotives with smaller wheels and designed for freight service. The pedestals will be of two heights; the lower ones for the supporting wheels of larger diameter, the higher ones for the smaller supporting wheels. The journal boxes carried in the pedestals are self-adjusting so as to secure uniform support for the journals. The lower half of the box contains a bronze bearing of suitable composition, while the upper half, which acts only as a cap and carries no weight, is made of cast iron. The bearing surface is ample for the weight to be carried, but in order to provide against any possibility of heating, the journal boxes are cored out and arranged for cooling by water circulation. The lubrication is accomplished by two chains over each journal dipping into a bath of oil. On the ends of each supporting shaft are the absorption brakes *C* which form the resistance which the locomotive must overcome, in order to exert its tractive effort at the drawbar. They are designed on a plan which enables them to work with perfect smoothness, to be used with ease and convenience and to have a large capacity. This type of brake was first used as a dynamometer at the Worcester Polytechnic Institute, and is the invention of Mr. G. I. Alden, formerly a member of the Institute faculty. This brake in its simplest form consists of:

1. A smooth, circular, revolvable cast-iron disk, with radial grooves, keyed to the shaft which transmits the power to be absorbed.

2. A non-revolvable housing having its bearings upon the hub of the revolvable disk.

3. A pair of thin copper plates fastened to the housing, one face of each copper plate being close and parallel to the sides of the revolvable disk, the other face of each plate having back of it a chamber in the housing.

4. A system of piping and connections by means of which water under pressure can be circulated through the chambers between the copper plates and the housing.

5. A system of piping and connections by means of which oil is circulated in such manner as to insure perfect lubrica-

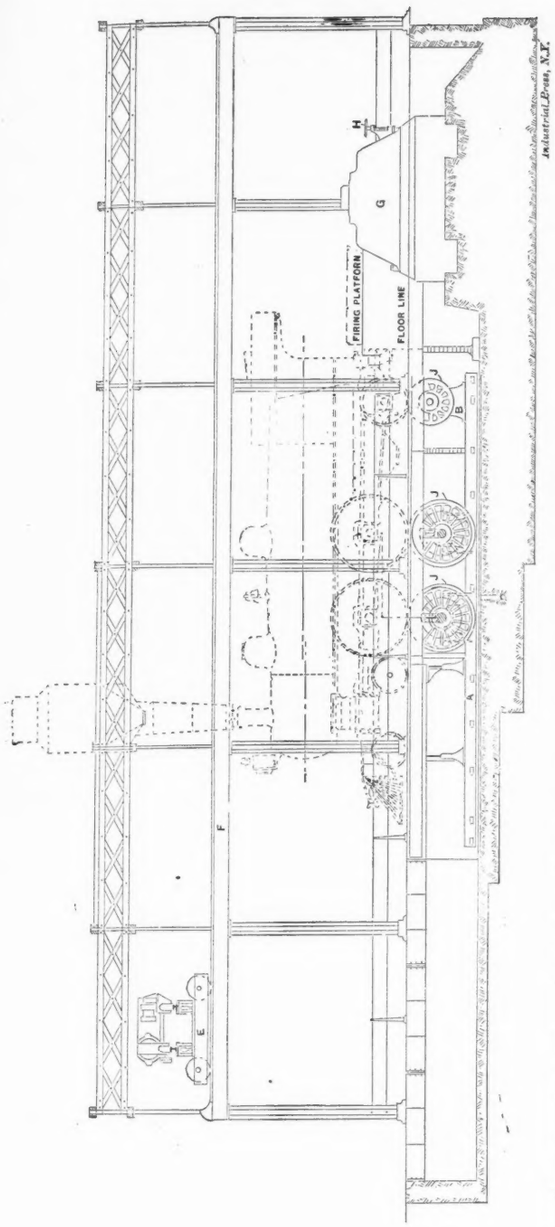

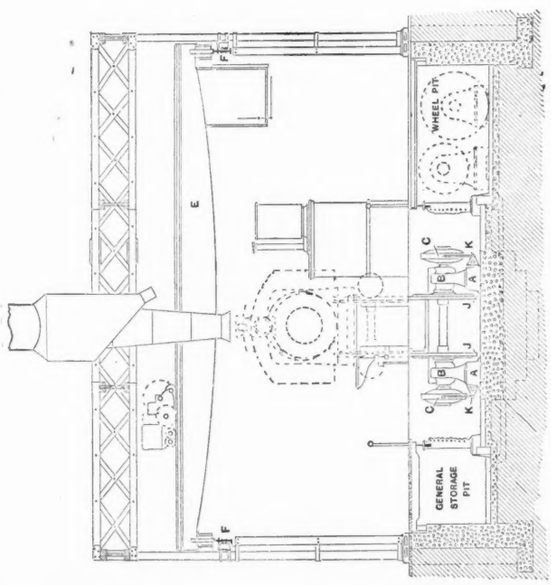

Figs. 1 and 2. End and Side Elevations of Pennsylvania Railroad Testing Plant at the Louisiana Purchase Exposition.

tion of the copper plates which are next to the revolvable cast iron disk.

To insure sufficient capacity, each brake is provided with two disks revolving inside of each housing with a suitable arrangement of copper plates and water chambers, to allow pressure to be exerted on both sides of each disk. Oil for lubrication between the revolving surfaces, enters near the hub of the disks and is carried by centrifugal force along the radial grooves in their sides and out to their peripheries, completing the circuit through external tubes. The housings of the brakes are secured against turning by rods attached to brackets *K*, which in turn are held to the sides of the bed plates by bolts in T-slots. The seats on the supporting shafts for the hubs of the brake disks are tapered, as at *D*, keys being placed in the shaft and hub to prevent turning. Nuts on the smaller end hold the hubs in position. Eight absorption brakes are provided, and may be used either on the shafts having the 72-inch supporting wheels, or on the shafts with the 50-inch supporting wheels, means for removing the brakes readily being provided by the taper fit already mentioned and a nut at the large end of the taper, so that the hub of the brake can be backed off without difficulty or delay.

When the brakes are in use, water under pressure flows through the chambers in the housings, pressing the copper plates against the sides of the revolving disks and causing resistance to their rotation. The pressure of the water is regulated by valves controlling both the inlet and outlet independently. The water thus performs the double function of supplying by its pressure the required friction, and by its rate of flow means of carrying off the heat generated. The pipes leading to and discharging from the brakes are brought together at one point where all the valves will be located, so that the pressure and rate of flow, can be readily adjusted to the work being done. To keep the speed of the locomotive constant, would ordinarily require hand manipulation of the valves controlling the ingoing and outflowing water, but in order to secure as nearly as possible constant speed, there is a by-pass around the main valve controlling the supply of water for all the brakes, and in this by-pass is an automatic valve controlled by the speed of the locomotive. If the speed increases beyond the desired number of revolutions per minute, the by-pass valve opens, so as to increase the pressure on the brakes, and if on the other hand, the speed of the locomotive falls below that desired, the automatic valve closes, and decreases the pressure on the brakes.

The supporting wheels resemble in form the usual locomotive driving wheels, having cast steel centers with tires shrunk on, and held in addition by retaining rings. The contour of the tire is approximately that of the head of a rail, but provided with means of keeping away from its bearing surface the oil which will necessarily drip from the locomotive while running.

The pit containing the parts already mentioned, is extended sufficiently to provide room for the storage of the supporting wheels, axles, brakes and pedestals which are not in use, and provides storage for such other supplies and appliances as will be necessary for the operation of the plant. The floor covering this portion of the pit is made in sections, so that it can be removed as occasion may require. The central portion of the pit, however, will be entirely open with the exception of sufficient platform to enable those taking part in the tests to secure indicator cards, make observations of temperatures and obtain other information of this character.

A traveling electric crane, *E*, of 10 tons capacity, and having a span of 43 feet between centers of runways *F*, serves the entire space occupied by the testing plant, also sufficient space beyond the pilot of the longest locomotive to be tested, to reach the cars loaded with supplies for the plant. The crane will be used for handling the supporting wheels, axles, brakes, pedestals and other parts, when necessary to change their setting, and further, for handling all of the coal used during the tests.

The water required for locomotives under test will be weighed in two tanks, filled alternately and run from these into a third tank, from which it will be taken by piping to the connections for the injectors. As a check on the weights

thus obtained, the whole supply used will be metered and readings taken at such intervals as will enable the amount shown by weighing to be compared.

The traction dynamometer *G* which measures the drawbar pull of the locomotive is of the lever type and is constructed on the "Emery" principle, in which flexible steel plates take the place of knife edges used in ordinary scales. The weight of each lever is taken by a vertical plate in a plane intersecting that of the receiving fulcrum plates at their center of rotation, thus relieving these plates of all transverse load. The yoke embracing the dynamometer and to which the drawbar is attached, is also mounted on flexible plates and braced by long and flexible rods, to insure frictionless motion in the horizontal plane only. The total motion of this yoke and drawbar, due to the leverage of the machine and to stress of parts when under full load, does not exceed four one-hundredths of an inch, so that a locomotive exerting a drawbar pull equal to the full capacity of the dynamometer, will not move forward on the supporting wheels more than the amount specified. The drawbar is provided with a ball joint, to allow for any side motion of the locomotive, or motion of the locomotive on its springs.

Near the base of the dynamometer the oscillating motion of the ends of the last levers is transformed into a rotary motion by means of steel belts wrapped around a drum and kept in constant tension by suitable clamping devices. The belt drum is mounted on a tube guided in ball bearings, and inside of it is a rod, the upper part of which is securely fastened to the tube, the lower end being firmly attached to the frame of the machine. It will thus be seen that when the belt drum is rotated, the rod inside of the tube is in torsion, and this resistance forms part of the total resistance of the machine, and is a constant for the same travel of the recording pen. To the upper end of the tube already mentioned are secured two radial arms, the extreme ends of which are finished to a circle having its center at the center of the tube. The angular motion at the end of one arm imparts straight line motion to a carriage, guided by a grooved track and carrying the recording pen. The opposite arm is coupled by steel belts to a rotary oil dash pot, to reduce violent oscillations of the recording pen, the extent of which can be controlled as desired. The principal resistances in the dynamometer are flat springs, placed under the second levers and deflected by the motion of these levers. There are three sets of these springs, varying in resistance so that a travel of eight inches of the recording pen corresponds to a drawbar pull of either 80,000 pounds, 40,000 pounds or 16,000 pounds, as may be desired. The drawbar pull is traced upon a strip of paper 18 inches wide, made to travel at a known rate for each mile run by the locomotive, and this will form the permanent record of the drawbar pull in each test. The yoke and drawbar of the dynamometer can be adjusted vertically through a range of 12 inches by means of a wheel *H*, in order that the different heights of locomotive drawbars can be accommodated.

The smoke from the locomotive will be carried out of the building by a stack, which can be moved longitudinally of the plant to any position required, and the lower portion of which will be made telescopic, so that it can be raised and lowered for adjustment, and permit the passage of the electric crane, when necessary. The stack has deflectors, so that the sparks discharged by the locomotive can be caught, weighed and form a part of the data obtained.

The instruments necessary to get full information for the tests, will consist, in addition to the dynamometer, of steam engine indicators, gages for steam pressures, draft gages for smokebox, firebox and ash pan, thermometers for temperatures in the smokebox, calorimeters for getting the quality of the steam, a revolution counter and a tachometer for showing the speed in revolutions per minute.

Means for bringing the locomotive safely to its position on the plant form a most important part of the installation. The supporting wheels having been placed in position corresponding to the spacing of the drivers, I-beams resting on the supporting shafts and extending the full length of the pit, will be bolted securely to the inside faces of the supporting wheels. Supports at the ends of the pit and at as many intermediate points as may be necessary will be provided. On the upper flange of the I-beams is riveted a grooved rail, so located that the flanges of the driving wheels will run in this groove; in other words, the locomotive will be moved to its position on the plant by being run on the flanges of its driving wheels, leaving the treads free to come into position upon the supporting wheels. When in place, the special rails and I-beams will be disconnected from the supporting wheels and removed, so as not to interfere with the operation of the plant. Provision will also be made for taking care of the driving wheels without flanges, which will be run over the same grooved rails, the grooves being filled by a suitable section of rolled steel.

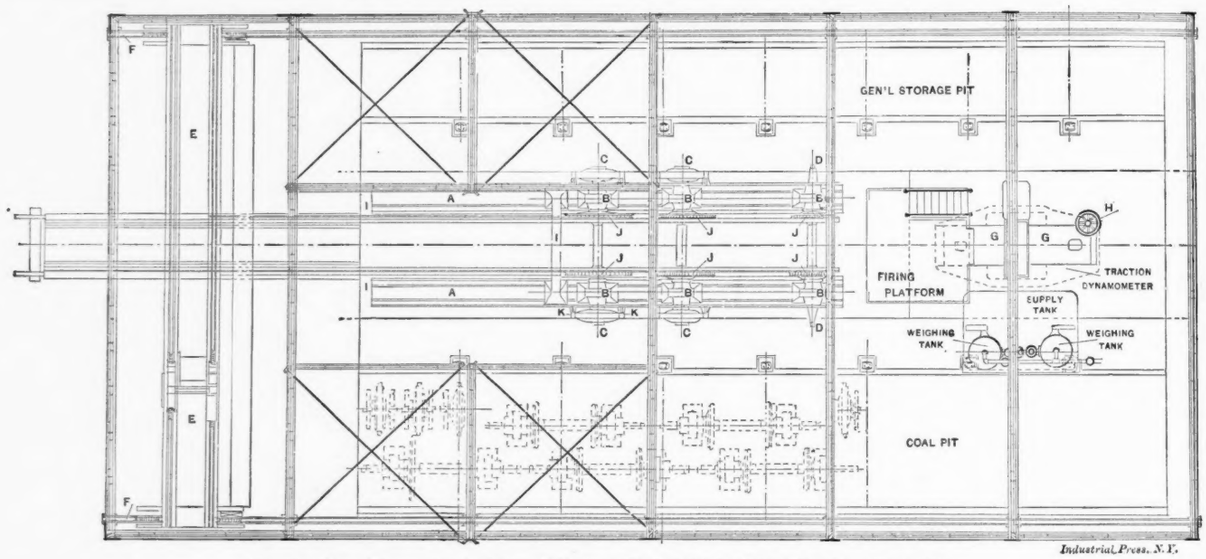

Industrial Press, N.Y.

Fig. 3. Plan of Pennsylvania Railroad Testing Plant at the Louisiana Purchase Exposition.

A director of tests will be in direct charge of the plant, and of all the tests made. Under him will be an assistant and a foreman, who will give his attention to the machinery, care of the instruments and other necessary work of this character. There will be a large staff of observers for the coal and water used, for taking indicator cards, temperatures and readings from all the instruments forming the equipment of the plant. In order that all of the data obtained may be worked up promptly, computers will be employed, so that the data coming from the observers on suitable blanks, will be tabulated and final results for comparison completed for each test, before similar data for the next run comes to the computing room. A force of 25 men will be constantly employed. All apparatus has been carefully selected and the most approved methods will be used to insure accuracy. The results will be put in a form convenient for reference.

A TALK ON THE DISK GRINDER,

WITH SPECIAL REFERENCE TO TOOL ROOM WORK.

F. N. GARDNER *

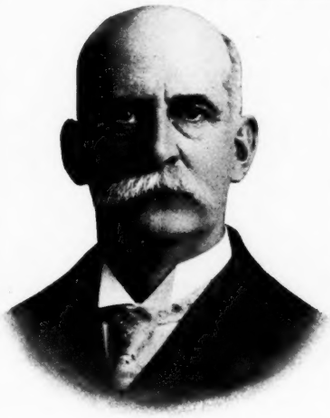

F. N. Gardner

In any machine shop or department of a manufacturing plant where tools for manufacturing operations are made, a properly designed and equipped disk grinder should be considered almost indispensable. For a large portion of the operations most commonly done with a file, and many that are considered surface grinder, milling machine or shaper jobs can be done better and quicker, and at less cost for files, cutters, etc., with a disk grinder.

As a simple example: A piece of tool steel is needed, say for a box tool, back rest, a cutter, or a forming tool, to be say, ¼ inch thick, 1 inch wide, 2 inches long, ends and sides straight and square all around. Probably the bar steel ¼ inch x 1 inch will be enough oversize to grind on a disk to exact size, but not enough oversize to work with a milling machine, shaper or surface grinder. Even if larger stock, say 5-16 inch x 1⅛ inch, or a forging, is used, it is only necessary to rough one flat side and one edge down fairly close to size and finish all over on a disk grinder. For squaring ends of one piece like this, and bringing it to exact length, the saving in time over the common way will pay the interest on the first cost of the machine for a month. Suppose this piece has to be hardened, and after hardening must fit a certain space, probably widthwise only, possibly all over. Say one end must be square, the other to have a certain angle. In any case the piece will need truing up and perfecting after it has hardened, and the saving in time will pay at least another month's interest on the cost of the disk grinder.

Referring again to the same piece: How would you square up the ends and bring it to length? You want only one piece. Nick a bar of steel and break it off about 1-16 inch too long. If, as is often the case, you have no milling machine or cutter handy, you get a 12-inch bastard file, spend ten minutes of time, wear out ten cents worth of file, and if you are an expert you have the piece within 1-64 inch to size in the closest place. Now your trouble begins! Fine files, Brown & Sharpe square, caliper gage, etc. If you are an expert filer, on close work, you will get the ends practically straight and square with the sides and edges and your piece to length within, say, .005 inch, in from half an hour to one and one-half hours. If you are not an expert you will never get it that close, because you will spoil it before it is finished. With a disk grinder you will do the job on these ends in about five minutes; you will get the ends square and the length as close as you want it. You do not have to be an expert. All you need is a little practice—not one one-hundredth as much as you would to do the job with a file, but enough to know about how hard to bear to take off .001 inch or .0005 inch, and to judge closely by the feeling and the sparks how fast the wheel is cutting. As a matter of fact, the kind of skill and experience required to do a good job of sizing or fitting with a disk wheel is very similar to that required for doing the same work with a file, but it is acquired a hundred times easier and results are 100 times more satisfactory on any work where a disk wheel can be used, and that means on some portion or all of nearly every piece that has to be put into a vise to file, and on small pieces that are machined on shaper, milling machine or surface grinder.

Hereafter when speaking of the tool room we will mean places where tools are made, not places where tools are kept and checked out to the workmen; in fact, the place where the tool makers work. Nearly every manufacturing plant has such a place.

The equipment of the tool room and the class of men employed in it is a pretty sure indication of the grade and quality of work turned out by the concern. As a rule, tool makers are the most skillful and the highest-priced men employed in a metal-working plant, and it is certainly good business policy to furnish them machinery and tools suitable for getting out their work with the least possible consumption of time. It is safe to state that in the smallest tool room, where only one or two tool makers are employed, a disk grinder will pay a good interest on the investment by the saving of files alone; and many times that in the saving of time.

Many of the operations done in the tool room and machine shop are so common and so simple that no one thinks of installing a new machine to do them. Take, for instance, getting a piece ready to turn in a lathe, say any length up to two feet long, and any size up to two inches diameter. You get the piece cut off either with shears or nicked and broken in blacksmith shop or sawed or cut in the cutting-off machine. In any case, the ends are not square or smooth. You have to center it. If you find the center with a prick punch and dividers, as you probably will if you work in a tool room, you will need a smooth square end to work on, but you will not get it unless you file it square and smooth or catch the piece in a chuck and face the end off with a tool. If the piece has much length you will have to put on your back rest. By the time you have the piece fit for centering and turning, you will have spent from ten minutes to an hour, according to the size and length of the piece. If you have a machine for center drilling and countersinking, this can be done if the ends are not perfectly square, but if you want a good job you will have to square the ends in the lathe, using a side tool. Every good tool maker knows that perfect centers in square ends are the foundation of a good lathe job, but it is so much trouble to make the ends square that many neglect it and that neglect often spoils the job, or the looks of it at least.

How will a disk grinder help you out on such work? You take your piece from the cutting-off machine and grind the ends smooth and square on the swinging table of the disk grinder. If the piece is cut fairly close to the finished length you will grind it to length and square the ends at the same time. It will take from one-half a minute to five minutes, according to the size of the piece and the shape the ends are in. Your ends will then be finished better than you can do them in a lathe and you will not have to touch them again unless you wish to lay the grain circular with a piece of emery cloth.

There are "a thousand and one" little jobs and finishing touches to jobs that can be and ought to be done with a disk grinder. Assume that you have one, say with wheels 12 inches diameter, a plain tilting table and a swinging table, and that you have extra wheels carefully set up with different grades of abrasive circles, so you can select the one best suited for your work. As the wheels are double-faced, with four wheels you can have eight varieties of abrasive circles ready for use at any time. You must be sure that the center part of the wheel, where it fits the spindle flange, is clean and that the flange itself is clean before you put the wheel on. Then the sides of the wheel will run perfectly true and steady, and you can do good and true work on it. On the contrary, if there is glue or dirt between the wheel and the spindle flange, the wheel will "wabble" and will not do good work. The tables are adjustable and can be set to do as nearly perfect work as you are likely to get with any machine in existence.

You have turned and squared up a collar to fit a certain place. You take it off the arbor and find it a little too tight for the place. You wanted to be on the safe side. Now you want it .0005 inch or maybe .0015 inch smaller lengthwise. You step to the disk grinder and get it just as you want it quicker than you could get it back on the arbor.

Possibly this collar has to be hardened and ground to size

*F. N. Gardner, the originator of the disk grinder, was born September 4, 1848, at Ashfield, Mass. Beginning shop work with John J. Grant in 1866 at Northampton, Mass., he has worked in various capacities from "cub" to manager for Wiley & Russell, Nonotuck Silk Co., Pratt & Whitney, Hartford Tool Co., and C. H. Besly & Co. He has been with the latter concern since 1888 and is superintendent of their works at Beloit, Wis. Mr. Gardner is an expert toolmaker, and his specialties are metal-working tools and special machinery.

after hardening. You will do the circular work all right in a universal grinder, but facing both ends would give you more trouble than all the rest, if you had no disk grinder; but as you have, you will face them off in about one-quarter of the time it took you to do the circular work on the universal.

It is a common thing to hear men say that such and such a machine will do perfect work. Now, we all know that there is no such thing in machine work as perfection. The best we can do is to make a thing plenty good enough and well within the limit specified. If a thing is plenty good enough, it is perfect to all intents and purposes.

Speaking of the degree of accuracy that can be got with a disk grinder, we can only give a few examples and say that a good workman can do exceedingly close work with it, and if the work is suitable for the machine he can do it easier and in much less time than it can be done in any other way.

An experienced tool maker was with an exhibit of disk grinders at a fair. Having plenty of time on his hands, he employed a part of it in grinding up six steel pieces, each 1 inch square (one-inch cubes). He got the pieces planed roughly in the bar, a little oversize, and sawed off a little long. On his spare time he ground them to one-inch cubes, measuring them with a 1-inch micrometer caliper. When he had finished with them there was no point on any of the cubes that varied more than .00025 inch from 1 inch. Packing them together with any combination of sides, the greatest variation from 6 inches as measured with a 6-inch micrometer was .0005 inch. All the sides of all the cubes were so nearly square with each other that no error could be detected with a hardened steel square. He probably spent 15 to 20 hours grinding on these cubes. Now these cubes were not perfect and nobody wants cubes anyway, but it shows what can be done with a disk grinder and will mean something to a good tool maker. Understand, in grinding these cubes no fixture or clamp of any kind was used. They were laid on the swinging table, and against the rib and pressed against the wheel with the fingers. Any other way will not answer for close work on a disk wheel. The man who made the cubes knew by the way he bore on and by the way the wheel cut, as indicated by the sparks, just about how much he was taking off. It is much easier to know that than it is to know how much you are taking off with a file. As he got down close to size, of course, he had to work carefully, but he had this big advantage over working with a file: The table and rib held the cube true and square every time and the wheel cut all over the surface alike.

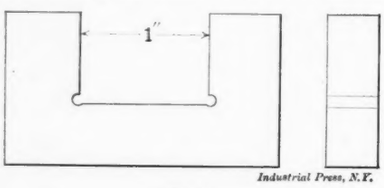

Fig. 1.

Standard end measure test pieces are sold that are guaranteed to be accurate within a limit of 1-50000 of an inch. Of course, you can't handle them with bare fingers and the temperature of the shop must be close to 75 degrees Fahr.; otherwise this limit will have to be extended indefinitely. Such standards are necessary where extreme accuracy of work is required for testing micrometers, beam gages, etc., but they must be kept locked in the safe most of the time and only used on special occasions. They will cost you about $5 each up to 1 inch long and $1 an inch additional above that. With your disk grinder you can make "end measure pieces" that are plenty good enough for everyday use in the machine shop or tool room at a cost of a few cents each.

You take ¼ inch or ⅜ inch, or any size you like, drill rod; cut it off say 1-64 inch longer than the size you want. Harden either all over or only the ends according to the length, and then grind to length same as you ground the pieces for centering. You can get it as close to size as your micrometers will measure, and aside from the hardening you can do all the work on it in about ten minutes.

Possibly you have to make a good many snap gages for the turret machine, milling machine, or lathe hands. They are not always very careful with gages, especially if they are on piecework. Suppose you have to make a snap gage something like Fig. 1, which is a common style of home-made gage. Probably you will want to make a neat-looking job, but don't want to waste any time filing, so after you have the notch roughed out, you will go to the disk grinder and finish the gage all over, sides, edges and ends, bevel or round the corners, and make a better looking job of it in ten minutes than you could with a file and emery paper in an hour and a half. You will harden it and it will spring a little, and you straighten it out straight and square again on the disc wheel. Possibly you had best not grind it at all until it is hardened. That depends on how much unnecessary finishing work you have done in the shaper of milling machine.

You are now ready to grind the notch to size. Lay the piece on the swinging table, the back edge against the rib. Let the wheel be in the notch. Grind on both sides of the wheel and do not turn the piece over. This will make the faces of the notch parallel with each other, and they might not be if you turned the piece over end for end. That would depend on whether the top of the table and the rib were exactly square with the side of the wheel, and also on the sides and edges of your piece being exactly parallel. Always use as few "working points" as possible. You will use your end measure piece to get the notch to size. You must be careful not to get the notch too large. Perhaps the safest way will be to make another end measure piece a little undersize, say .0005 inch or .001 inch under size. It will not take you five minutes and may save spoiling the gage. Starting with your standard end measure and your gage hardened ready to grind, you will have the gage finished in fifteen minutes, and how would you do it without the disk grinder?

If you want a nicely finished gage with the idea of inspiring a little respect in the minds of the milling machine hands, you will finish it all over on the disk wheel in about ten or fifteen minutes and make an elegant looking job.

In a certain shop a job came up to be done in turret machines. A large number of cast-iron pieces, about like Fig. 2

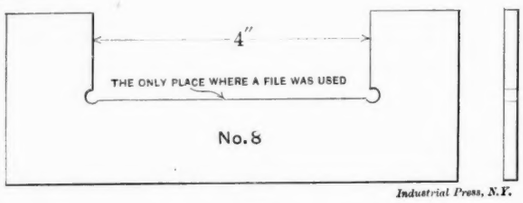

Fig. 2.

had to be machined. There were eight different sized pieces and three dimensions made to gage on each piece, making 24 dimensions in all. The largest dimension on the largest piece was about four inches. The smallest dimension on the smallest piece was about ¾ inch. A few thousand pieces of each size had to be made. Extreme accuracy was not required; a variation of .001 inch was allowable. A tool maker was given the job of making a set of snap gages.

Taking the figures, he made 24 end measure pieces from 5-16-inch round drill rod, hardened them and marked the size. He then cut the gages from ⅛-inch thick sheet steel, something in this shape, Fig. 3:

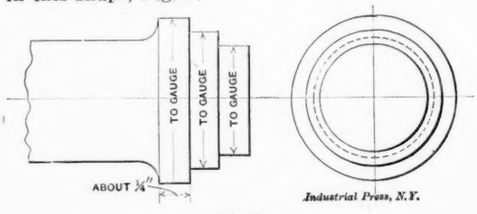

Fig. 3.

It was thought better to make a separate gage for each dimension rather than to combine the three in one gage. The working faces were hardened and ground to the end measure pieces on disk grinder, also the edges squared and the corners rounded. The job was not touched with a file except to smooth off the edge in the bottom of the notch.

Time taken in making the 24 end measures of drill rod and the 24 snap gages, ready for use, was 30 hours, and the largest part of this time was used in cutting out the sheet steel and rough machining the notches. These gages were entirely satisfactory. They were used to complete the job and will be used again if required.

You are called on to make a bushing for a drilling jig—old one worn out and they want a new one in a hurry. Bushing is 1 inch outside diameter, 1 inch long, with hole for 33-64-inch drill. How will a disk grinder help you out?

You catch a piece of 1 1-16-inch or larger round tool steel, 3 inches or 4 inches or 6 inches long, in your lathe chuck. Drill the hole, say, 1¼ inches deep, a little under size and bore it true. Round the outer end of the hole and square up the end. Turn outside to 1.001 inch or 1.002 inch and cut off your bushing. Harden the bushing and lap out the hole if it has "gone small." Unless you learned your trade of Noah and are very old-fashioned, you have not left a flange around the top, so you go to the disk grinder and grind the outside to fit the jig. You will do this by setting it on end on the table of the disc grinder, with the squared end down. Press lightly against the wheel and turn the bushing around at the same time. You will have the old bushing to set your micrometers to, or you will keep trying it with the hole in the jig. In either case you must be careful not to get it too small. If you have not left too much to grind you will have it down to size about the time you get the lathe tool marks out. If tool marks are ground out before it is down to size, you will have to test the "roundness" with micrometers and grind on the high sides. The tool marks, while they last, will be a very good indication of whether you are getting it out of round or not. Of course, the less you have to grind, the better, but if you have turned it reasonably close before hardening, you can fit it to the jig in one-quarter of the time it would take to fit it with a universal grinder, and not have to make a special arbor either, as you probably would have done if you had used the universal grinder, which was probably set up for another job anyway.

I don't advise you to depend on a disk grinder for fitting all kinds and shapes of drill jig bushings, but for common sizes and shapes, when you have no reamer for sizing the hole and no arbor to turn and grind them on, and possibly no universal grinder either, you can fit them in this way and with proper care do a very satisfactory job in quick time.

You can use the same method for fitting round punching or drawing dies into the holders after the dies are hardened. In fact, with your disk grinder you can do a very good job of fitting on the periphery of any round piece that has one flat end and whose length is not too great in proportion to the diameter. For fitting and straightening up punch dies after hardening, such as are generally made flat with beveled edges, or for making a true smooth surface on the top of a die where you have to lay it out, it goes without saying that a disk grinder is the only thing.

Just lately we saw a man grinding the planer tool marks off a punching die blank to get a true and smooth surface for laying out the die. The blank was at least 10 by 15 by 1½ inches thick. This was pretty large work for the machine, but he got the surface all right and quicker than it could have been got in any other way.

Setting up a screw machine you get forged tools for cutting off or forming, made of ⅜ by ¾ or ½ by 1-inch bar steel. The bottom edges in all probability are neither flat nor straight and do not seat solid in the toolpost. You go to the disk grinder and make the bottom edge of tool straight and flat in about two minutes. How would you do it without the disk grinder? You would probably leave the tool as it came from the blacksmith, with the bottom edge rounding, and it would get knocked out of position every few minutes.

A man on big planer wants a wide finishing tool, about 2 inches wide on the cut. Without a disk grinder how do you grind it at first and sharpen it when it gets dull? You take it to an emery wheel or grindstone and get it as nearly straight as you can by testing the edge with a straightedge and then you rub out some of the curves with an oil stone. You spend half an hour and the planer man says: "It's pretty fair, but the clearance ain't just right." With a disk grinder you fix the tool in three minutes, and after that, the planer men bother the life out of you bringing around their finishing and slotting tools to be ground.

Think a minute about sizing and finishing nuts and screw-heads, fitting keys, finishing key ends, etc., etc., and you will see more and more places where the disk grinder gets in its work in the tool room.

A well-known ex-toolmaker and machinist, who is now superintendent of a large plant, said the other day: "I have known for a good many years that there was some machine missing. I wanted it badly, but I didn't know exactly what the machine was. Now I have found it. There it is." And he pointed to a disk grinder in his tool room.

Also, for sharpening dies and punches—the operation is so simple and the advantage so evident that it would be a waste of time to describe how it is done.

Your humble servant worked twenty years making gages and tools before he ever saw a disk grinder. If he could have had a disk grinder to use whenever he needed, it would have saved years of time. My experience is that a disk grinder in a tool room where only one tool maker is working will be used on the average a dozen times a day and will pay for the investment in the saving of files alone, to say nothing of the saving of time, which is of course many times greater; and, that you can multiply the saving of both files and time by the number of men who have convenient access to the machine. In this talk I can touch only a few of the "high spots" on which you will use a disk grinder in the tool room. The jobs you actually have to tackle are innumerable as the sands of the sea.

* * *

HAMMER DRILL—EXPANSION BOLT.

A simple and effective tool for drilling small holes in brick walls is shown in Fig. 1. It is designed primarily for electric wiremen's use, being employed to drill holes for small expansion bolts. The body of the tool is a steel rod with collars

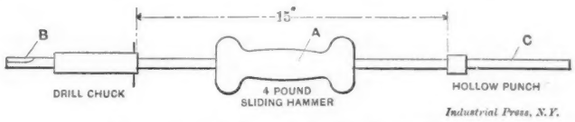

Fig. 1. Hammer Drill for Drilling Brick Walls.

15 inches apart. Between the collars is the four-pound sliding hammer *A*. The drill *B* is held against the brick wall while quick, sharp blows are delivered against the end of the drill chuck, which at the same time is turned around so as to drill a round hole. It is claimed that a ¼-inch hole can be drilled in brick to a depth of 1 inch in less than one-half minute.

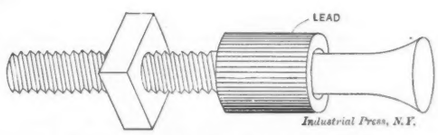

Fig. 2. Expansion Bolt with Lead Bushing.

The Peirce lead expansion bolt, made by the same concern, is then inserted in the drilled hole, head first, and the lead sleeve forced back over the conical-shaped head and expanded tightly in the hole. The hollow punch end of the hammer *C* is employed for this purpose in the same manner as for drilling the hole.

* * *

Skimmed milk is a product of the dairy that has many other uses besides the feeding of calves and hogs. It is made into cheese, glue, putty and many other products, including galalith or petrified milk, that is largely used abroad as a substitute for horn, turtle-shell, ivory, celluloid, marble, amber, and hard rubber. It is used for the handles of knives, for paper cutters, pipes, billiard balls, etc. Skimmed milk is also valuable as the principal ingredient of a primitive paint that has been considerably used in the country for painting barns and outhouses. Another novel use is the making of waterproof glue. One pound of glue melted in two quarts of skimmed milk, instead of water, is said to constitute a glue that resists moisture well.

LETTERS UPON PRACTICAL SUBJECTS.

THE OLD SHOP—CUTTING THREADS WITHOUT A BACKING BELT.

Editor MACHINERY:

In knocking around I went to work in a shop away out in Nowhere, and there were several funny things there. One was the windows. They could only be seen from the outside. The panes were set with the length horizontal instead of vertical. Over the shop door was a sign very much worn by the weather, on which, after a close inspection, if one's eyes were good, the following could be seen:

NOTICE.

NO ADMITTANCE; APPLY AT THE OFFICE.

I always thought that the sign was to prevent visitors from being lost in the semi-darkness of the interior, which looked something like this:

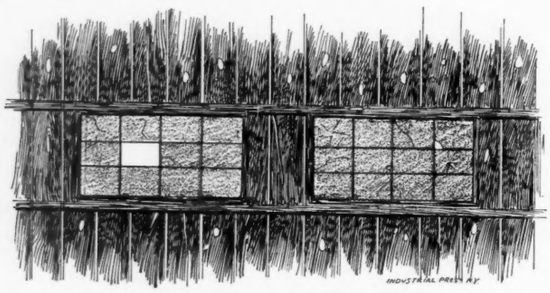

Where the Windows were Never Washed.

The clean square in the window to the left is not a broken glass; one of the boys started to clean it when the Old Man stopped him. The clean spots in the wall are knot-holes in the boards. Please note the cracks—we did when the mercury was trying to get down in the bulb to keep warm.

One day one of the boys saw something posted up on the wall. He got an old bag, tied it to a stick and used it to brush off the dust, and then we saw it was a printed set of rules. One of them read like this:

"This shop must be kept in a clean and orderly manner."

The boys are all scattered far and wide now, but if any of them reads this he will recognize it right off, for that was a great day.

I saw one of the men in that shop one day cutting a thread about 16 inches long and about 8 pitch in a lathe that had no backing belt, but it did not stick him. He pulled the belt back by hand! The same fellow said that MACHINERY was no good; he could not be bothered by reading it.

It is surprising how many there are who do not know of any way out of the same difficulty, but it is simple. Stop the lathe and run back even inches after opening the leadscrew nut. Put a mark on the faceplate and one on the leadscrew gear, run back to the same point every time, and when the two marks are in conjunction, when sighting at some point beyond the leadscrew gear, close the nut. Care must be observed at first, but a little practice will make it easy. Or we can run the thread upon the work as far as it is to go, then run the carriage back even inches and set a stop. Then when we run up to the end of the thread again, open the nut without stopping the lathe, run back to the stop and when the work has made as many revolutions as there are threads per inch, from the time the nut was opened or a multiple of the same, then close the nut and see if it don't work.

Elmira, N. Y. JOHN A. BURGESS.

TURNING A THIRTY-TWO INCH WHEEL UNDER DIFFICULTIES.

Editor MACHINERY:

Regarding the article in the February issue of MACHINERY by Mr. Frank B. Kleinhans, on the chattering of lathes, I would tell your readers of a makeshift which was employed by one of the lathe men who was turning and finishing a 32-inch wheel, and which, under the circumstances, answered very nicely.

Our largest lathe is a 24-inch swing and when this job came in to be done the head and tailstocks were blocked up, of course, in the usual makeshift manner, and on account of the "overhang" referred to by Mr. Kleinhans, it appeared to be impossible to avoid the chattering.

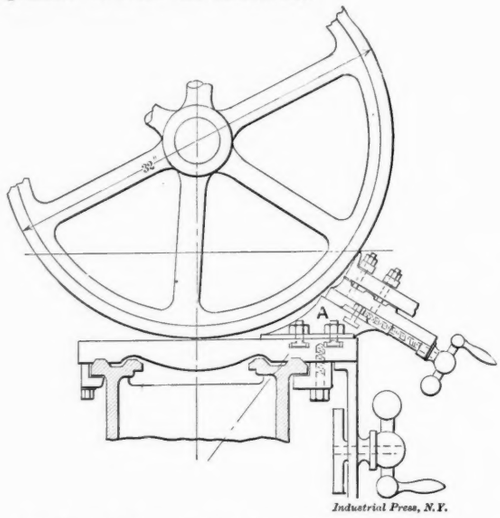

Fig. 1. Rig for Turning Work Larger than Swing of Lathe.

After trying various tools the man at the lathe crossed the belt and ran the lathe backward, turning the cutting tool bottom up. He was able, working in this way, to turn out a very neat and smooth job.

If we had intended to turn out many of these 32-inch wheels we should have made a special tool-post bracket with the arrangement as per sketches submitted herewith which I have used many times before. It consists of a casting marked *A*, the only extra piece needed for this device, which is designed to fit the carriage, also to fit the tool slide that is already in use on the lathe.

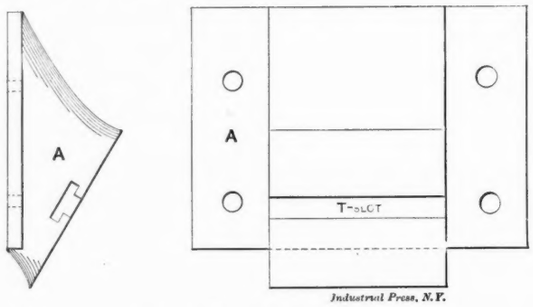

Fig. 2. Bracket for Tool Slide.

It will be seen that with this arrangement all of the chattering will practically be done away with, or in other words, all the chatter now to be found will be between the lathe spindle and its bearings. It also will be noticed that a right angle taken from the line joining the lathe center and the cutting edge of the tool, will point to a line inside of, or between, the ways of the lathe.

A. D. KICKER.

JIG FOR BORING ROUGH CASTINGS.

Editor MACHINERY:

Probably no class of work has given the jig designer more trouble and less satisfaction than cast gears. If they are spur gears and it is attempted to hold them concentric with a bushing for boring in anything like a ring of fixed diameter, it will be found, if they are hand molded, that rapping has taken place more in one direction than in another. Consequently the gears may fit one way, but be seriously loose another. Again, if they are machine molded, in which case rapping has not to be contended with, there is variable shrinkage and fins

and lumps that will not allow of any close fitting receptacle of fixed diameter. The work from a certain molder may go in to-day, but another man takes the pattern next week with perhaps the result that the work goes in too loose or will not go in at all, or only a certain percentage goes in.

It may be that the purchasing agent thinks he has gotten a good thing on a new lot of iron, and before the foundryman has gotten his mixture down fine a lot of gears are out. Very likely some one will say that these things ought not so to be, but we know from experience that they do occur; the gears are made and have to be bored, and have to be assembled, so as to run smoothly. How can this best be accomplished?

The writer has some time since become convinced and has proven to his satisfaction that cast spur gears should be held from the outer ends of the teeth at three points as nearly equally spaced as possible, and that the holding should be done by jaws moving to and from the center. The outer ends of the teeth are selected because they are less liable to distortion by the washing of sand and by swelling than other parts of the teeth, and any slight lumps are much more likely to be removed in the tumbling barrel from the ends than elsewhere.

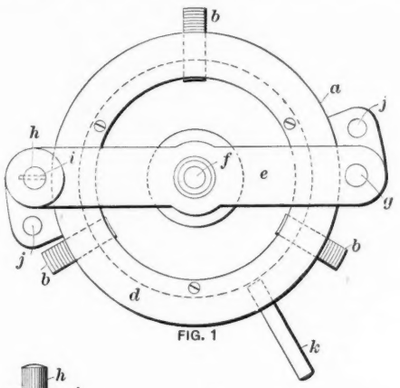

FIG. 1

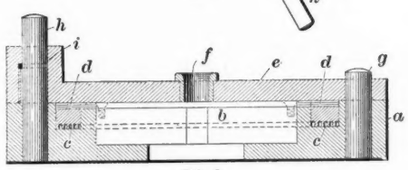

FIG. 2

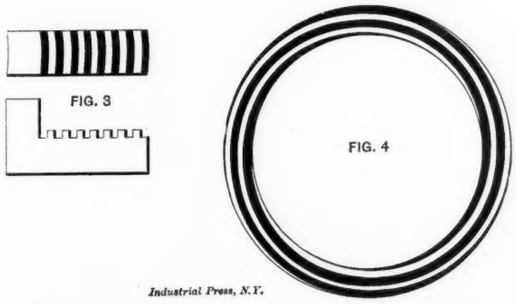

Industrial Press, N.Y.

Jig used in Agricultural Works for Boring Rough Castings.

Again, it is much more convenient to hold them from these points than otherwise. If three equally spaced points in the periphery of a gear are held true with the jig bushing, all intermediate points must be well located for the boring operation. In placing the gear in such a jig it is quite within reason to expect the workman to observe three points when he would not look over the whole circumference. In our case where the gears working in a certain nest were jigged as described the cost of assembling, that is to say, keying to shafts, babbitting bearings for shafts and bolting up so as to have a free running set of gears, was reduced exactly one-half from the former piece-work price.

The manner of holding as described, the writer has accomplished by several devices. One of these has been a special form of scroll chuck. The same jig chuck may be made to accommodate different sizes of gears within a limited range with, it may be, the exchange of bushings.

Figs. 1 and 2 show top and sectional views of such a jig. Referring to these figures, *a* is the main body casting, which is planed to receive the three steel jaws *b* and turned to admit the scroll ring which will be seen at *c*, while *d* is a steel ring used to retain the jaws and scroll. At *e* is seen the cross-bar for the support of the bushing *f*. This cross-bar is held in place by two guide pins *g* and *h*. The latter is longer than the former, so that when a gear is to be removed from the jig the cross-bar may be raised only sufficiently to clear the short guide pin and then swing aside upon the longer one. The end of the cross-bar engaging the long pin is provided with a boss of sufficient length to insure a parallel movement and prevent cramping. At *i* will be noticed a pin driven into the tall guide pin and left projecting into a slot. This acts as a stop to prevent the cross-bar from slipping down again when swung aside until again brought into line with the short guide pin. At *j* are seen holes for attaching the jig to the drill press table. A handle for revolving the scroll ring is shown at *k*. Fig. 3 represents two views of a jaw and Fig. 4 the under side of the scroll ring.

For gears that are to be tapped the twist drill will of course answer for sizing the hole. Where a variation of bore of .008 inch, or more, is permissible the four-lipped twist or straight flute drill will give good service, but if closer sizing is required a finishing reamer may be used after the truing of the hole has been accomplished through the bushing. If greater accuracy is desired than can be had from simply a bushing, a piloted tool with support below can be added It is sometimes possible to make the bushing turn within a bearing, thus saving much of the wearing away of the clearance on drills, which will occur rapidly if holes are cored eccentric as often happens.

When gears of large enough diameter and with dished arms are to be bored the jaws of jig may be reversed, placing the shoulders outside of scroll ring with the guide pins coming up between arms, in which case the cross-bar is made lighter and will be completely removed when work is to be changed. In this way the weight of a jig may be kept at a minimum.

For the machining of the scroll ring and the teeth of jaws, the lathe, by a little contrivance and calculation, may be arranged with a geared cross-feed of suitable ratio. It must be remembered that the teeth of the jaws are of a spiral the reverse of the scroll ring and they will need to be relieved at the ends if the jaws are to have more than a slight movement. The jaws can first be fitted tightly into body casting for cutting the teeth and then be relieved sufficiently to secure free working.

CYRIL B. CLARK.

Springfield, Ill.

FINDING THE HEIGHT OF A SMOKESTACK FROM ITS SHADOW.

Editor MACHINERY:

Having been one of the many readers of MACHINERY for the past few years, I have been very much interested in the articles contributed from time to time, especially those on "shop kinks," as they seem to give a snap to one's "thinker," and having had a little problem to wrestle with a short time ago, I wish to submit it to your many readers, hoping that some time it may come in handy to them, which I am sure it would, provided they should run up against the same snag that I did.

About a year ago, while I was with a prominent automobile company, as chief draftsman, the superintendent came into the drafting room one morning bright and early and wished to secure the approximate height of the smokestack on the factory, as it was in very bad condition and the company wished to erect a new one. Now, the idea of having to measure the height of a smokestack without an instrument suitable for that purpose seemed like a vision. At first it seemed as though about the only way out of it was to secure the services of one who possessed an instrument, which would mean considerable time and expense, and to measure the stack with a tape line or yard-stick was simply out of the question altogether. But after pondering over the problem for a short time an idea came to me that proved very successful and which solved the problem. I went out into the yard, secured a pole and had it cut to exactly eight feet long, which afterward I held in an upright position with the end resting upon the

ground so that the pole would cast a shadow in relation to the smokestack. My assistant measured the length of the shadow cast by the pole, which was found to be four feet (shadow being measured on level ground). We then measured the length of the shadow of the stack in the same manner, which we found to be eight feet.

Therefore, if the pole was eight feet long and cast a shadow four feet, a pole one foot long would cast a shadow one-half foot long. As the shadow of the stack was eighty feet long, the height of the stack would equal as many feet as one-half foot is contained in eighty feet, which is one hundred and sixty feet, or the height of the stack from the ground. Taking from this forty feet, the height of the building, gave us 120 feet, the length of the stack proper. W. E. GOULD.

Detroit, Mich.

RIG FOR MILLING PINION TEETH.

Editor MACHINERY:

We had occasionally to cut pinions twelve teeth, three pitch, on the end of a crucible steel shaft about 32 inches long. The body of the pinion was 4¾ inches diameter; the shank, 2 11-16 inches.

We had been cutting these on an old style No. 4 Cincinnati milling machine, using extension plates bolted to the table to separate the centers far enough to take in the work. This made a rather limber rigging, and we found that to use the automatic feed we had to take three or four cuts, and the time required was about thirty-three hours on each one.

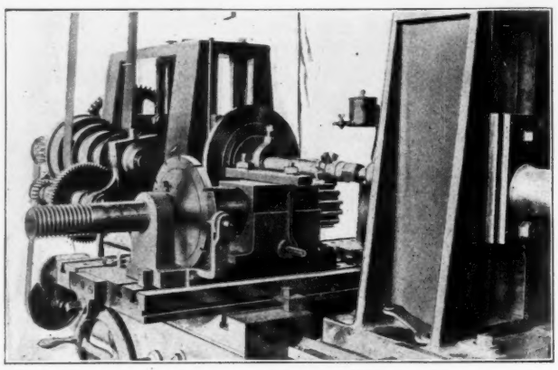

Rig for Milling Pinion Teeth on Horizontal Boring Mill.

We then built the holder shown in the cut. This consists of a solid casting tongued and bolted to the table of a Pratt & Whitney horizontal boring machine. This has a cap and is bored out to fit the body of the pinion. The cap is bolted down, as shown in the cut, by two eyebolts connecting to a rod through the body of the casting. When we want to take off the cap we loosen the bolts, pull out the rod and lift it off. We index by a plate setscrewed direct to the shank of the pinion. Thrust of the cut is taken through the index plate to the bearing back of it, which is cast solid with the main bearing. Feed was effected by a "small boy." He did not like the job, so we got them out in nine hours each, and got a good, smooth job, too. E. H. FISH.

Worcester, Mass.

THE VALUE OF THE AIR-DRILL IN REMOTE SHOPS.

Editor MACHINERY:

I have several very good wrinkles in machine tools and appliances which your readers, especially foremen who work in a general machine shop such as ours, would be very glad to see. The first (which is something more than a wrinkle) is in connection with the "Little Giant" air drills, of which we have two; it is really surprising the amount of work that can be done with them, when fitted with the "fixing" shown in the cuts.

Fig. 1 shows the machine and knee (the knees are made specially for the drills) fixed on a loose table; it is now practically as good as a radial drill. You will notice a split collar under the radial arm, which acts as a stop to prevent the radial arm sliding down when being revolved round the vertical post. When this photograph was taken we had a large government contract for railway goods wagons, and all holes in the iron work were drilled in jigs; not one part was allowed to be punched. So we fixed up the two drills as shown, and I can assure you we turned out as much work with them as we did with our two radial drills which were on the same work. The fact is they saved the cost of two new radials, which would have been of no further use to us after the contract was finished. Another advantage was we could use the machines in any part of the shop, and when the drilling got behind we simply ran the air drills two shifts of 10 hours each; we then only had to run the air compressor all night instead of the main engine, which you can see was a great saving in fuel. As shown in Fig. 1 the drill moves along the radial arm in a feather way, which always holds the machine in an upright position. I may state the feed is 5½ inches, but, of course, it can be made any length. The cost to us of the fixing complete for the two machines was about $105. I am sure the makers, if they took up the idea, could make the gear and knee complete for one machine for less than $20. All our parts were forged, which soon runs into money, but with your people some parts would be malleable cast, and others stamped forgings.

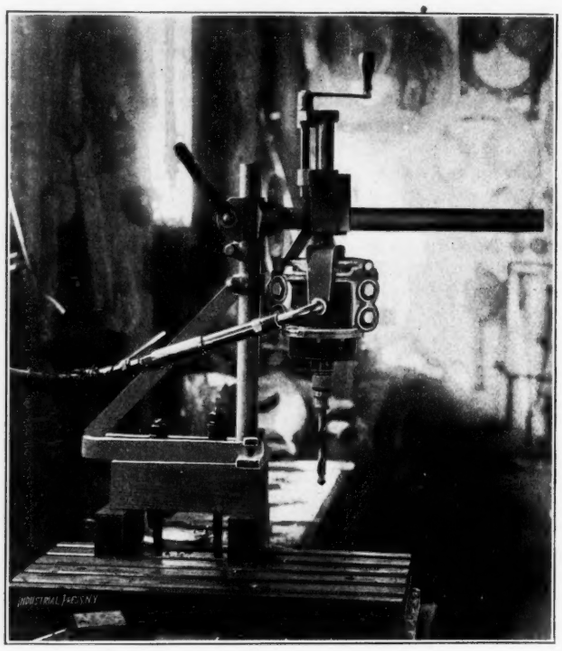

Fig. 1. Air Motor Drill Mounted on Radial Arm.

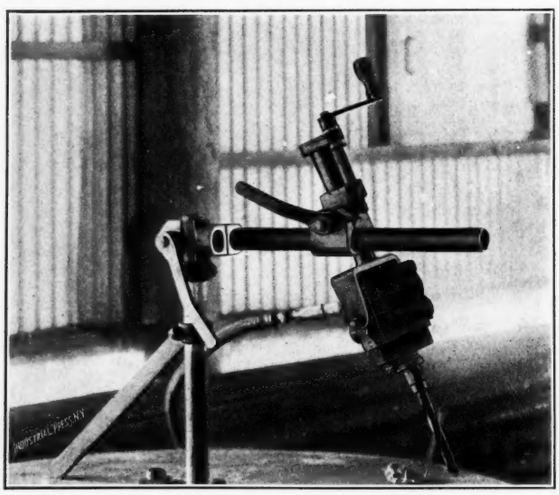

Fig. 2. Use of Air Drill on Boiler Heads.

Fig. 2 shows the drill fixed on a boiler end, ready to drill

rivet holes for gusset stays and gage cocks; the steady-pins and feather have been taken out of the swivel head to show that holes can be drilled at any angle.

Fig. 3 shows both drills at work in a boiler shell. The shell is 9-16 inch thick; butt joints; fitted with cover plates inside and outside; triple riveted; working pressure 140 pounds; test pressure 220 pounds; holes punched 5/8 inch and drilled in place to take 7/8-inch rivets. You will notice the drills are hung

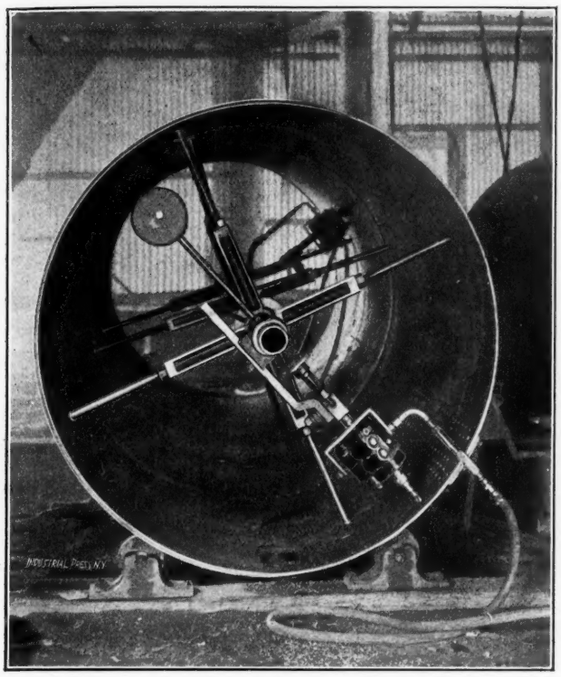

Fig. 3. Rig for Drilling Staybolt Holes.

on a 4-inch boiler tube, and can swing round the whole circle, but in practice it is better to work at the bottom of the shell, for a distance of one-sixth, say, of the circumference, and then turn the shell on the rollers, because in that position it is easy to supply the drills with lubricant. The star center (of which there are three) for supporting the 4-inch tube, will fit boiler from 5 feet 6 inches to 8 feet diameter. The tube is made full length of the boiler, and the drill is only hung on end of tube while drilling six holes in from the end of the shell. When they are done, the drill is slipped off the tube, two of the screws

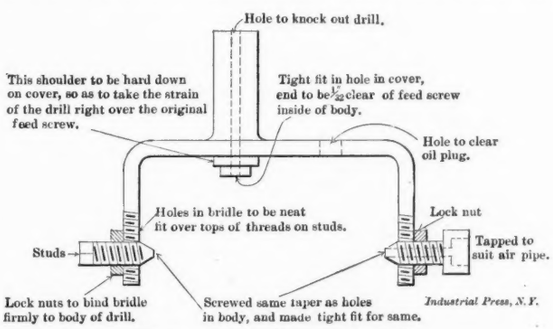
Hole to knock out drill.
This shoulder to be hard down on cover, so as to take the strain of the drill right over the original feed screw.
Tight fit in hole in cover, end to be 1/32 clear of feed screw inside of body.
Hole to clear oil plug.
Holes in bridle to be neat fit over tops of threads on studs.
Lock nut
Studs
Tapped to suit air pipe.
Lock nuts to bind bridle firmly to body of drill.
Screwed same taper as holes in body, and made tight fit for same.
Industrial Press, N.Y.

Fig. 4. Bridle for Mounting Air Drill.

in star are slacked back, star is removed, drill slipped on, star replaced, the two screws tightened and all is ready for work again. You will notice that the gear is so made that the holes must be drilled radially and that the machine is balanced in any position when drilling; the machine is not held in any way. When one hole is finished the machine is simply pushed along the tube to the next hole, or swung round, as the case may be.

As I said before, this is something more than a wrinkle. I am sure if the air machines were fitted with this gear there would be a great demand for them. The great fault with the drills as now put on the market is the difficulty of holding the machine when the drill is going through the work, especially mild steel, brass and copper. I would like to see the two men that can hold the machine when drilling a 2-inch hole through mild steel, but with this rig it is just as easy as in a radial drill.

To give an instance of the value of these air drills when fitted with the bridles, we have just finished a tandem compound engine L. P. Cyl. 25 inches diameter, bed 31 feet long, Our usual way was to carry the bed, with cylinder, guide bars and bearings attached, to the big radial drill, and shift it about so as to reach all holes. That style you know means expense, but now, when the bed is once laid on the blocks it is not moved until ready to leave the work. The turned bolts for fixing cylinder to bed were 2 inches diameter. We drilled the holes 1 15-16 inch diameter, and then put in the 2-inch rose-bit without shifting the machine; the holes, of course, were just as good as when done in the radial, and at one-tenth the cost. Of course when drilling in a confined space we take the bridle off and use the original feed and make the best of it. I may state the gear can be taken off and put on again in less than two minutes. The rough sketch of the bridle, Fig. 4, will show how it is made and why it is so firm and strong. Of course the arrangement would be much more simple if the body casting was made to suit.

W. PARRY.

Bundaberg, Australia.

CUTTING OIL-CHANNELS IN BEARINGS—OIL-CHANNEL CHISELS.

H. E. Wood.

Editor MACHINERY:

Many times the question has arisen as to the proper specifications of an oil-channel. Having had a broad experience with these little "friends" of machinery, I find that it is decidedly necessary for an oil-channel to have an opening at its extremity so as to permit the air to pass out, thus leaving the way clear for the oil to follow into the space. A large number of machine manufacturers seem to be making the common error of putting a channel in the bearing leading from the oil hole (which should be in the center and at the top of the bearing) out to within 1/4 or 5/8 inch of the end of the bearing. When they do this, and put the machine together, oil it up and start running it, the oil will go from the oil-hole to the end of the channel and stop (provided there is space enough between the shaft and the bearing to permit the air to escape). The person who does the oiling has no evidence to tell him if the oil has reached its destination or not. What are the consequences?

The answer is, that at once the fine particles that wear off from the surfaces of both shaft and box, together with the dust that is apt to settle into the oil-holes, all accumulate in the channel and are constantly washed and forced up or out toward the end of the channel until they lodge at its end. It takes only a short time for this substance to fill up the channel completely; then the shaft gets no oil only at the oil-hole itself, which also gets stopped up so many times and causes no end of trouble and expense.

Whereas the above facts can be seen by a careful observer, let it also be observed that if the machinist had cut the channel through to the outer end of the bearing there would then have been a free and unobstructed channel for this dirt or substance to wash out and away. It also acts as an indicator for the person who puts the oil in; he knows when he puts oil in the center and sees it come out at the ends that he has oiled the entire length of the bearing. In addition to this let it be noticed that if there be a hub or gear or pulley of any kind at the end of the bearing, it then becomes necessary to cut the channel up the side of the box to the open space. This then gives the oiler a response for what he has done, or in other words he knows that he is oiling an open channel and that it is not clogged up. When the careful operator of a machine thus provided with open channels, sees that the riser or outlet vent offers no response, he will then at once proceed to find out why. Many times when the bearing has a pulley

or gear against one end and a collar against the other end, such as is often the case, and the channel has by some reason become stopped up, the collar may be slipped endwise on the shaft away from the bearing and a wire run through the

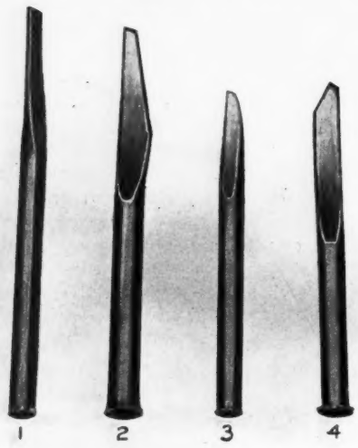

Types of Oil Groove Chisels.

channel will quickly clean it out. Again when the shaft or pulley gets to cutting or is "stuck tight" and a machinist is called to remedy the trouble, his first move is to put kerosene oil into the oil-hole; then if it does not start loose he will squirt the kerosene on at the ends of the bearing, in hopes that it will reach the spot that is cutting, and if at this critical time he finds a channel down at the end of the bearing, he stands a good chance of getting the oil onto the affected part.

The objection may be raised that if the oil channel is cut all the way through the box or bearing, the oil will run out, and of course it will; but the fact is that a few drops of oil will wear many hours on a shaft running at ordinary speed, and by the time enough oil has been put into the oil-hole so it runs out of the ends, there must be enough oil left on the shaft to run it until time for the next oiling up. It is a well established fact that if a bearing is oiled at each end only, the oil will form an air-tight collar around the shaft, and the result is that the oil never gets to the center of the bearing; hence the converse of the proposition is to put the oil in the center and provide channels so it can escape at the ends. The owner of the machine can better afford to waste a few drops of oil, than to have his oil channels plugged up and stop the oil from doing its duty.

In connection with this subject I have made a close study of chisels, both for flat and round nose. I have especially taken notice of the peculiar sort of oil-groove chisel used by 90 per cent. of machinists with whom I have worked. I send you a photograph of four round-nose chisels usually used for cutting oil-channels. No. 4 is what I call the correct shape; it will be noticed that the cutting edge is in such position that when in use its center is slightly above the axis of the chisel. This position will admit of the chisel taking a heavy blow and not springing out of place.

All machinists will agree with me that it is usually impossible to chip an oil-channel straight and smooth; what is the reason? When the chisel is hit with the hammer it springs and vibrates; that is why. If anyone will grind his chisels to the shape of chisel No. 4, he will be surprised at how smoothly and easily it will cut. This shape chisel can be used equally as well on outside or flat surfaces, as it can on the inside of a hole; it can also be used as a "center-drawing" chisel on the drill-press with good results.

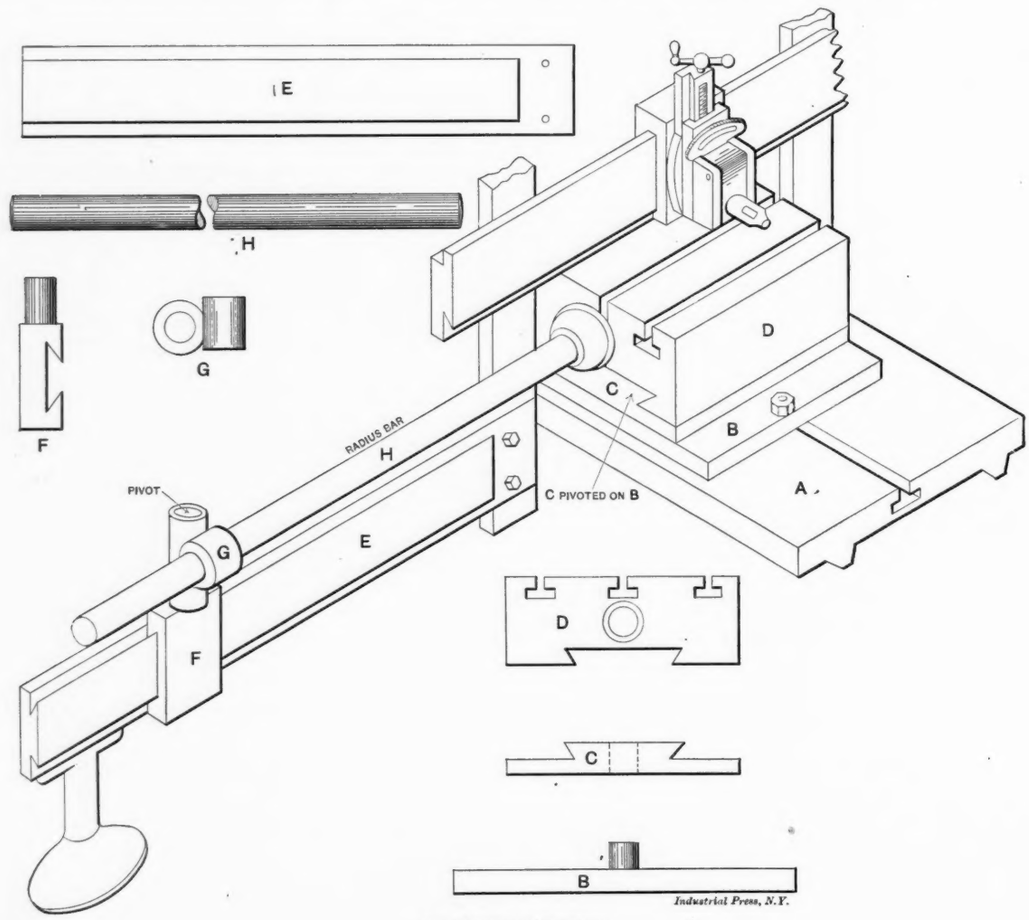

Arc Planing Attachment.

No. 3 is next to the best one in the group because its cutting edge comes the next nearest to the axis of the body, but it cannot be used with good success on a long flat surface as No. 4 can. No. 1 and No. 2 show about the average shape of round-nose chisels, as used by nine out of every ten machinists you meet with.

Therefore, I would request any fair-minded machinist who uses a round-nose chisel to fit one up in the shape shown by

No. 4, and try it, and if he is not satisfied with the results I should be very glad to hear from him, either through the columns of MACHINERY or by correspondence.

Pearl River, N. Y. H. E. WOOD.

ARC PLANING ATTACHMENT.

Editor MACHINERY:

The attachment described in this article, while it may be an old story to some members of the trade, I think will be new to some others. I have never found but one in all my travels. The building up of large circular dies for blanking out sectional parts of electrical apparatus, had grown to such an enormous extent in a certain shop that this attachment was designed to do the planing on the circular parts of such dies. It can be adapted to almost any planer, and work of almost any radius can be done on it.

Referring to the assembled sketch, *A* is the platen of the planer; *B* is a pivot plate bolted to the same, and on which the dovetailed part *C* swivels; *D* is the work platen fitted to slide on the part *C* and also provided with T-slots; *E* is a dovetailed rail attached to the upright of the planer and standing off at right angles with the end supported by a short post on the floor; *F* is a movable pivot fitted to the rail *E*. The piece *G* is journaled to pivot *F* and provided with an eye to take the round bar *H*, which latter fits into a socket on the end of the work platen *D*, and completes the attachment. The principal parts of the attachment are also shown in separate views in the same cut.

In operation the work is bolted to the work platen instead of the planer table which, being attached to the bar *H*, swings on the pivot *F* and carries the work on a circular line instead of straight. The radius is obtained by moving the pivot *F* and adjusting the tool on the planer in the usual way.

The work done on this attachment must, of course, be limited as to length, but is otherwise very satisfactory, as you can plane either the inside or outside of the circle, as will readily be seen by the sketch. PRACTICAL.

SET OF TOOLS FOR A MANUFACTURING OPERATION.

A. L. Monrad.

Editor MACHINERY:

In the article herewith a double-acting punch and die, and an indexing drill jig will be described. These have replaced the old ones, and have increased the quantity and quality 25 per cent.

In Fig. 1 is shown an assembled sectional view of a punch and die for a double-acting automatic press, for blanking and forming a piece from sheet metal, 2⅞ inch wide, and .037 inch thick, of the shape shown in Fig. 2. The blanking die *A* is of tool steel turned and threaded to fit the cast iron die bed *B* and is made with a stop-pin hole *Q*, and another in the opposite side to fit a spanner wrench. In the center it is worked out to fit the blank, and with an angle of 60 degrees on the bottom, to match with the forming die *D*. In making the blanking and forming die the construction of the first is made independent of the other, for the reason that the bottom or forming die *D* has to be replaced much oftener than the top or blanking die *A*. Before making the blanking die it is necessary to ascertain the proper shape of the blanks, which must be such as to form into the desired shape for the finished piece after passing through the drawing die. This can be calculated very closely by men accustomed to this work; but can, however, easily be found by filing out a few pairs of approximate blanks and trying one of each pair in the forming or drawing die, and when the desired shape is found, making the blank die to the mate of the suitable blanks. The drawing punch *H*, blanking and drawing die *A*, *D*, are hardened but not the blanking punch *E*, which can be upset when worn. An inclined open-back press of an angle of 45 degrees is used, to let scraps and the work fall off by their own weight into two different boxes on the floor.

In this kind of double-acting press tools, the punch *E* cuts the blank and holds it firmly on the top of the die *D*, and then the punch *H* descends and draws the blank through drawing die *D* and bottoms on knockout or former *K*, which forms the arc shape. The tension for holding the blank while being drawn up with the punch is received from the rubber spring *N*, which is adjusted with the nut *S* on the bolt *M*, and is embraced by the two steel washers *P P* on the top and bottom. On top of the upper washer are placed four pins *L*. These go through the cast iron die bed, and fit into the blank holder *K*. The blank being held between the face of the punch *H* and the knockout *K*, the punch in descending causes the rubber *N* to compress, and continues downward 2¾ inches. The mechanism below is inclosed by the cover *R*, which is secured with two screws *O O;* a hole is provided in the bottom of *R* to adjust the nut *S*. On top of blanking die is placed the gage plate *J*, made the right width of the blank, which latter is of such width that the punch cuts out the triangular part only, on each end. A stripper *T* is shown on top. Both are fastened to the face of the die by the two cap screws *I I*.

The double-acting cam press is equipped with the Bates automatic roll feed. The blanking punch, shown at *E*, has a straight shank, which is threaded at one end, and is held securely in the punch holder by a threaded ring or a collar. The forming punch *H* is secured to the gate of the press by a yoke key at the shoulder *G*, and as the gate with the punch ascends the piece is stripped from the punch *H* and deposited

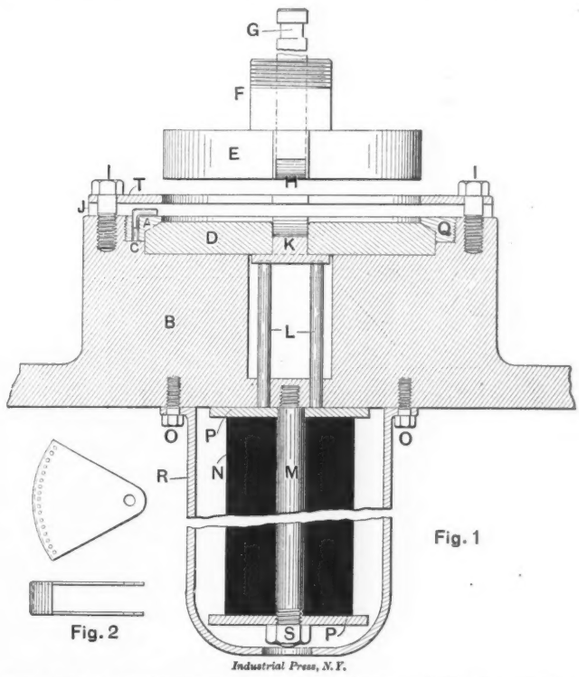

Figs. 1 and 2. Double-acting Punch and Forming Die; also Work Produced.

in a box on the side. The blanking and forming die is hardened and tempered; the cutting edge is internally ground to size and tapered ½ degree. The cost of these tools is quite a little more than the old timers, but the extra cost is offset by the surprising results.

Fig. 3 shows an indexing drill jig, for drilling the part, Fig. 2, which has 17 holes on a radius of 2 3-16 inches. These holes must be spaced accurately and equally apart. The body *A*, Fig. 3, is of mild steel. After being machined out to the right shape, the two bushing holes are bored at the same setting, and a boss is turned on the side to fit the lever *B*, which is threaded to receive the nut *C*. This nut has two holes on the side to fit a spanner wrench and is screwed up to a shoulder, but the lever *B* must be a close fit. The part *A* is now placed on a hardened and ground arbor between centers on the milling machine and the sector is cut in 17 divisions, one side of the cutter being radial and 1-16 inch from the center, while the other side is at an angle of 25 degrees with the radial line. In most cases the index head of the milling machine will be found "out," the error being .002 to

.005 inch (?). To overcome this the radial side is made the working side and the error is eliminated after the jig is finished and a sample drilled. A gage is made the width between the two holes. If the holes are found "out" the radial side of the index plate is scraped until the gage enters right. The body *A* is now hardened and if any imperfection is found after casehardening it is lapped on the radial side until the gage enters. This style of slot, having one side radial, gives the greatest accuracy in use because chips or dirt do not easily lie on the radial side since the index finger or plunger tends to shove everything off this face as it enters the slot, and if a chip does get on the other face its presence does not affect the setting because the plunger is forced tight against the radial side.

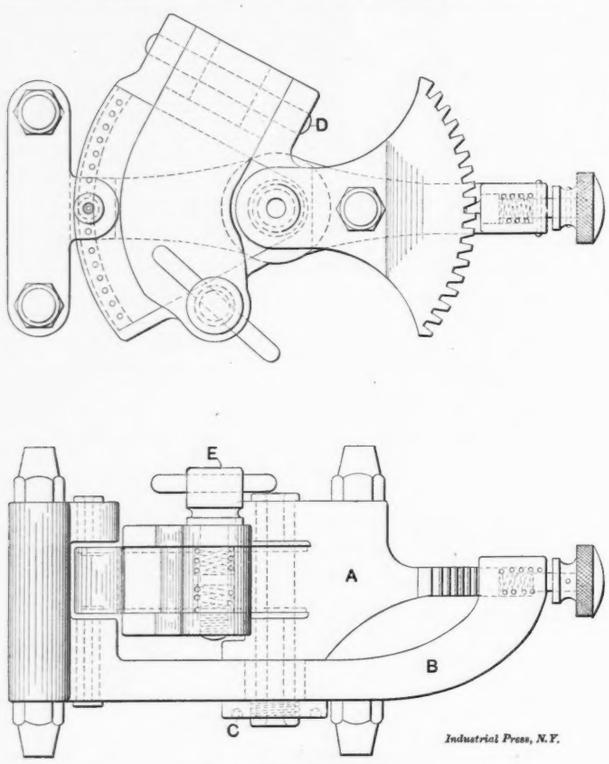

Fig. 8. Indexing Drill Jig.

The index lever *B* is made of machine steel, and is made a close turning fit on the boss turned on *A*. The location of the bushing holes is obtained from the model after the jig is assembled, and the holes are bored at the same setting. The indexing mechanism consists of a round plunger, which is hardened, ground and lapped at the end to a perfect fit in the slot of the indexing plate.

The clamping device is two straps made of machine steel and casehardened; they are jointed and held in together with a pin *D* on the body *A*. On the other end it is fitted with a screw *E*. This is screwed into the bottom strap, and two spiral springs are placed between the two straps to keep them in an opened position when the work is entered. The action of the screw *E* clamps both sides at once. A triangular recess .030 inch deep is planed out of both sides of *A* for the reception of the holes to be drilled; the ledges at the sides keep the work in right position for drilling. On the outer edge an arc is milled on both sides .020 inch deep and a little beyond the holes to prevent the burr sticking in the holes after drilling, and permit the parts to be easily removed.

A. L. MONRAD.

New Haven, Conn.

AN EXPERIENCE IN MAKING SMALL COIL SPRINGS.

Editor MACHINERY:

Some time ago our firm took a contract to make 5,000 sets of certain parts of a numbering stamp and before we finished the job we had all sorts of trouble, both expected and unexpected. One of the parts was a small open helical spring. It was made from piano wire, No. 7 music wire gage, and was 13-32 inch long by .108 inch outside diameter. There being six in each machine, 30,000 were required but we thought best to make 5,000 extra for good measure. Before we finished, another order for 25,000 was received, so we made 60,000 altogether.

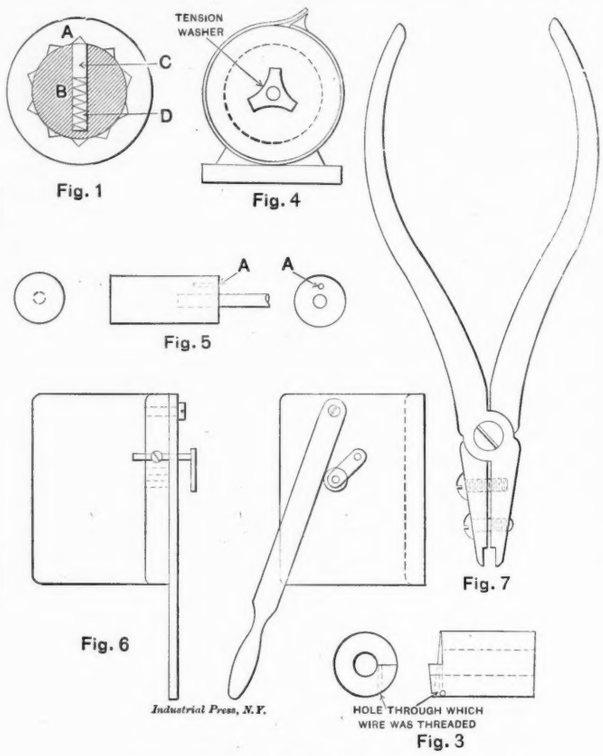

Appliances used in Making Small Coil Springs.

Fig. 1 shows how the spring was used. *A* is the type wheel, *B* the shaft on which it revolved, *C* the blocking pin, *D* the spring in question. The type wheels were revolved by a pawl and when in position, the pin *C* prevented them from shifting and getting out of line but still allowed the pawl to revolve them quite freely.

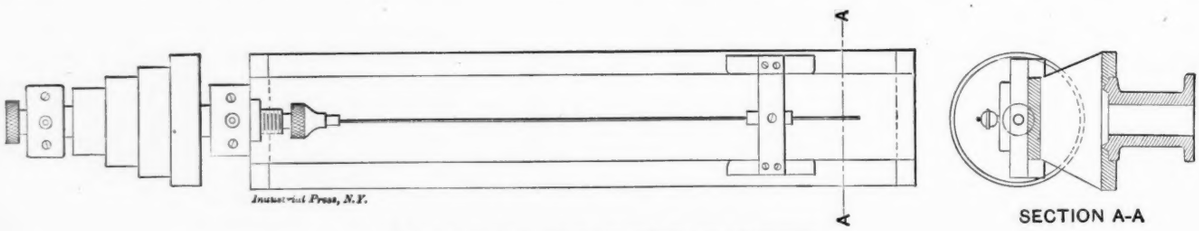

Fig. 2. Disposition of Lathe for Winding Small Springs.

The springs were wound in a speed lathe, using a piece of drill rod 3 feet long for a mandrel. Fig. 2 shows a general view of the winding device and Fig. 3 an enlarged view of the guiding sleeve. To prevent the wire springing open and getting tangled a reel shown in Fig. 4 was made. On the end of the mandrel was soldered a short piece of ⅜-inch round brass as shown in Fig. 5, in which a small hole, *A*, was drilled. This piece of round brass was held in the lathe

chuck and the mandrel lay extended on the board slide shown in Fig. 2. The guiding sleeve was then slipped over the mandrel and brought close up to the chuck, when the wire was threaded through the hole in the sleeve, the end bent at a right angle and caught in the hole in the brass rod. A few turns were made by pulling the belt, after which the power was applied. As the spring was wound it forced back the slide carrying the guiding sleeve and just before it reached the end of the mandrel the lathe was stopped and the wire

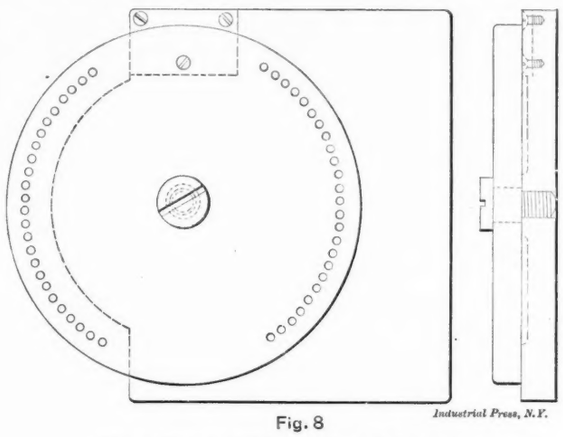

Fig. 8

Fig. 8. Plate for Grinding off Ends of Springs.

cut. A pull of the belt then wound the short end of wire and drew it through the hole in the sleeve. The sleeve was then slipped off the mandrel, the wound spring removed and the operations repeated.

It was not long until the boy doing the work let the lathe run until the sleeve was forced off the end of the mandrel, with the result that the wire was twisted off, leaving the end still threaded through the hole in the sleeve. He was bright enough to see that this was an improvement over stopping the lathe, cutting the wire, winding the end and then threading up again, and the job was finished by twisting off, and afterward similar ones were done in the same manner.

To cut the springs to length a simple shearing fixture was made, which is shown in Fig. 6. The end of one of the long wound lengths was passed through the hardened steel bushing until the end touched the gage, when a quick stroke of the lever cut it off the supposed proper length.

The writer tested this fixture and found that the springs could be cut with only a small variation in length. But what can be done, and what a boy left to his own devices for a little while will do, are often radically different propositions.

We delivered a few of these springs for trial and our customer discovered that the end of the wire upon which the pin rested caught on the sides of the hole and created a lot of friction, and decided that it would be necessary to bend in the end of the spring to overcome this difficulty. This did not look like a desirable job and after experimenting with it I concluded that it was worse than it looked.

Of course it was an extra and I put on a price that I thought would keep it away. However it did not, so I took several pairs of small pliers and had them fixed as shown in Fig. 7. I tried three boys on the job with very poor success. Two of them either could not or would not do the work properly, and the third at the end of the first day threatened to leave. I finally had them done outside the shop by piecework.

Before I was out of the above trouble, complaint came in that there was too much variation in the lengths of the springs. I might mention that this was the first lot of these machines and as is usual the customer was constantly finding out things about them. The proprietor of our shop got disgusted and threatened to tell him that if they were not good enough he would have to fix them himself. But he did not and we had to find a way out. I concluded to try grinding and as a test took a piece of hardwood 13-32 inch thick and drilled a hole through it large enough to receive a spring. Taking this to the surface grinder I set the table at the proper height, dropped a spring in the hole and slid the board carefully under the wheel. I tried a dozen or more and found that I could get them the same length within a few thousandths of an inch. Then I had the fixture shown in Fig. 8 made. It will be noted that there are two sets of holes, 25 in each set. The fixture was clamped to the table of the grinder, one set of holes filled with springs and the disk turned slowly so as to bring them in succession under the

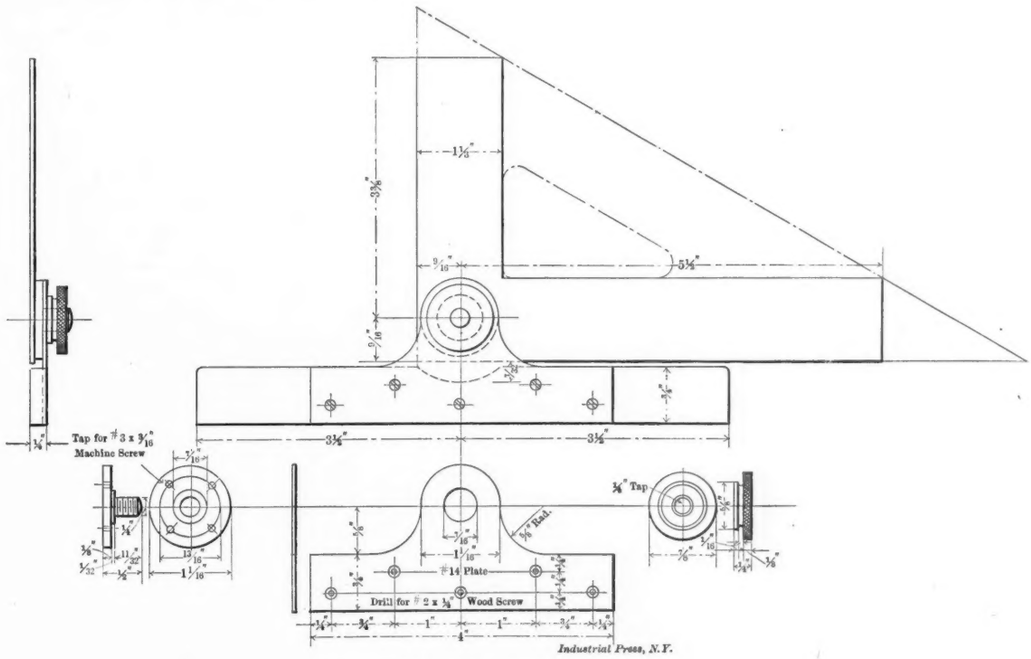

Draftsman's Adjustable Angle.

emery wheel. After passing the wheel they dropped into a box and the boy by keeping an account of the number of sets had them counted.

In a short time complaint came that the springs were too long, and investigation showed that the cast-iron plate beneath the wheel had been worn by the sharp ends of the wire. A hardened steel plate at this point cured this difficulty. The grinder was in the tool room, so I had the boy in charge do the grinding, as he had lots of spare time. At first he turned out a goodly number but soon the output began to fall

off, so finally I tried the premium plan on him. He was not long in discovering that he could increase his wages fifty per cent. and the job did not last long after that.

WAITE J. BEVERTS.

DRAFTSMAN'S SPECIAL ANGLE.

Editor MACHINERY:

Most draftsmen are fully aware of the trouble of making drawings on the skew. While this may be done by shifting the straight-edge or using one triangle against another, it is tiresome to do so and, where there is much such work to do, the special angle shown in the cut on the preceding page, will be found a very convenient tool to use, as it can be set at any angle to suit the work.

The blade was made out of an old 30 by 60-degree triangle, as the cut shows, and is fastened to the clamping screw by four No. 3 x ¼-inch machine screws with heads countersunk into the blade. The remainder of the cut explains itself.

Shelby, O. W. HOY BRADLEY.

GRINDER FOR CONTROLLER CONTACTS—SCREW DRIVERS FOR BRASS WORK.

Editor MACHINERY:

Herewith is given a description and sketch, Fig. 1, of a method of finishing the contact parts on electrical controlling apparatus. It is a combination of an electric motor having a

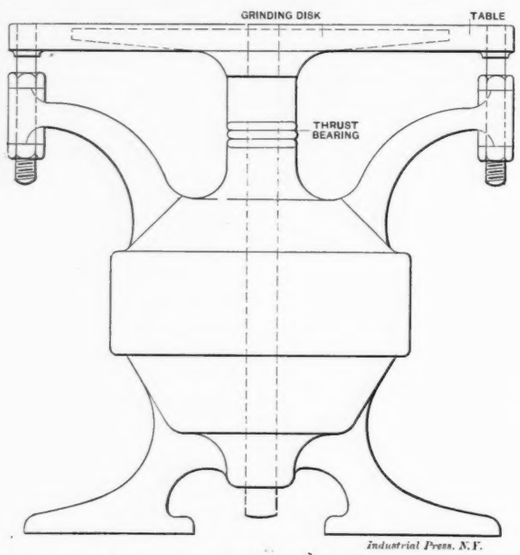

Fig. 1. Sprague Motor Converted into Vertical Grinder.

grinding disk mounted directly on the vertical armature shaft and having a table arranged to support the slate or marble slabs to which the contacts are fastened by flat head screws and nuts.

The changes necessary to convert an ordinary Sprague motor to a vertical motor were very simple, the casting holding the field coils being retained in its original form. The castings supporting both ends of the armature shaft were so altered as to allow the motor to stand upright and also provide means of holding a table. This is clearly shown in the drawing, making a detailed description unnecessary. The table itself was held at the proper height in relation to the grinding disk by four studs and nuts, as shown. While this is undoubtedly a crude method of adjusting the table, still it was adopted because the quantity of one kind of work done on this machine required that the table remain in one position for quite some time. It was found quite necessary to counteract the excessive downward thrust of the shaft (occasioned by the weight of the armature winding and the pressure on the disk) by means of a ball and roller bearing on the shaft directly under the disk. Besides a considerable saving of time over the milling machine this grinder has the additional advantage of giving the contacts the finished appearance which is very desirable in work of this kind. Fig. 2 shows some samples of the work done.

The sketch, Fig. 3, relating to the screw drivers probably explains itself. Where a large number of finished brass screws are to be driven it is necessary to use a screwdriver that will *fit* the slot in the head. Finding that the common driver with its blade shaped like a cold-chisel, *A*, would not answer the requirements at all because of the tendency to slip and mar the head of the screw the style of blade shown at *B* was devised. It is simply a piece of drill rod ground on an emery

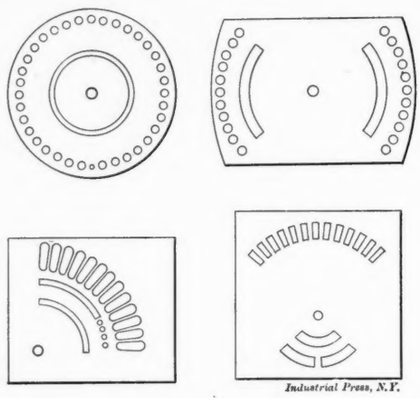

Fig. 2. Samples of Work Done.

wheel to fit the slot, as shown. This makes a very practical tool, which, when worn or broken may be easily repaired by the same method by which it was originally made. The driver for round head screws shown at *C* is made with an inserted blade and the stock is hollowed out to fit the head.

After quite a bit of experimenting the handle of red fiber was adopted for all drivers because of its simplicity. It can

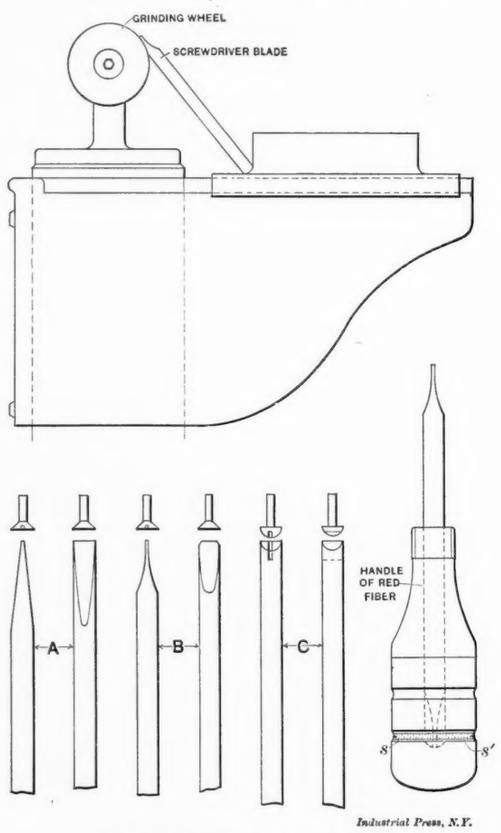

Fig. 3. Construction of Screw Drivers.

be made a nice fit on the drill rod and the two small screws, *ss'*, that bear on the flats of the blade prevent same from turning when strain is applied. These details may seem trivial to most shops, but where there are about fifty screw drivers in use day after day the necessity for some system becomes evident.

H. J. BACHMANN.

New York.

SHOP KINKS.

A DEPARTMENT OF PRACTICAL IDEAS FOR THE SHOP.
Contributions of kinks, devices and methods of doing work are solicited for this column. Write on one side of the paper only and send sketches when necessary.

CUTTING SLOTS WITH A HACK SAW—SAWING TUBING.

We recently had to cut a number of slots 1-16 inch wide in a position where they could not be milled. We first tried to cut them with a hack-saw and then file them out, but found this process too slow. By putting two blades in the saw frame at once, however, I sawed the slots without any trouble. The set of the teeth in one blade came just right to let the blades lie close together.

If you have to saw thin tubing or anything of a similar nature, grind the set off of one side of two blades, and place them in the frame with the teeth pointing in opposite directions. You will be surprised at the result.

Cincinnati, O. J. L. MARSHALL.

WAY TO GRIND SHEAR ON CUTTING DIES.

It is a well-known fact that shearing a die makes the punching operation much easier on the press. Very often, however, it is found advantageous to leave the die straight until after hardening. The object of this sketch is to show a simple and effective method of grinding the shear after the die is hardened on a common grindstone.

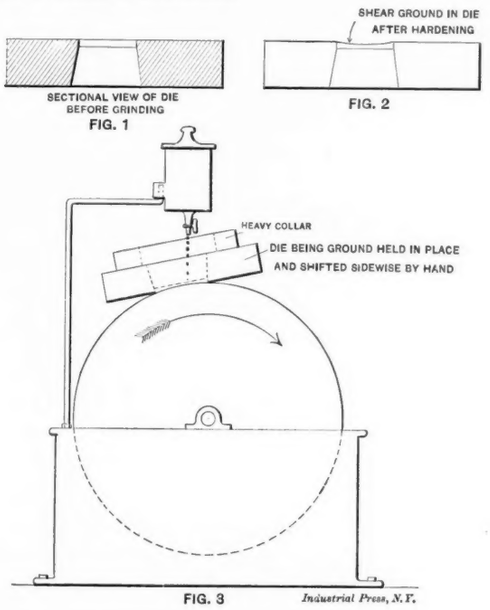
SHEAR GROUND IN DIE AFTER HARDENING
SECTIONAL VIEW OF DIE BEFORE GRINDING
FIG. 1
FIG. 2
HEAVY COLLAR
DIE BEING GROUND HELD IN PLACE AND SHIFTED SIDEWISE BY HAND
FIG. 3
Industrial Press, N.Y.

Figs. 1 and 2 show the die before and after grinding. Fig. 3 shows the die in position near the top of grindstone with a heavy collar on same, the latter being added to impart sufficient pressure. The water falls into the opening in the die, and all that the operator has to do is to keep the die slightly to the back of the center, so it has a tendency to climb, which fact makes it very easy holding, as it would naturally be difficult to hold the die in place at the extreme top of grindstone. Shifting the die sidewise causes the grinding action to be more effective, it is needless to say. While this is a rather odd way to do the "trick," yet it is certainly O. K., inasmuch as it is not only easy, but is also safe, there being no chance to draw the temper, which is liable to be the case in using an emery wheel. ROBERT A. LACHMANN.

Chicago, Ill.

DRILLING HARDENED STEEL.

I saw in the March number how F. J. K. drilled his saws, and perhaps it was about the best thing to do in that particular case. I had a similar experience some time ago on some spring shifters. We were building a machine and the spring for the shifters was ordered of spring steel stock ¼ by 1 inch. There were twelve of the shifters which were bent by the blacksmith to the desired shape, and two holes had to be drilled in each one. They were found to be too hard to drill after being bent and so were annealed at the end wnere the holes were to be drilled; but the annealing did not make them soft enough for drilling and I had to grind drill two or three times for each hole, although turpentine was used for lubricant. Then I re-ground the drill, making it very flat so that the point was only about 1-64 inch ahead of the cutting edges. With this form of grinding and by using coal oil (kerosene) I was able to drill the remaining 22 holes with only two grindings of the drill.

After testing the steel we found it to be a refined tool steel plenty good enough for chisels. In fact I had a ⅜-inch chisel made from the steel, and it stood up well. For drilling hardened steel and chilled cast iron I think there is nothing like coal oil. We use Morse twist drills.

Hanover, Pa. COOK DUNKINSON.

BABBITT SOCKETS FOR RATCHET DRILLS.

I had to drill a number of holes of different sizes with the ratchet drill but found, when I got the ratchet and what drills there were from the tool room, that the ratchet had a square taper hole in the spindle, and that there was no way of holding the regular taper or straight-shank drills.

It seemed as though I should have to make some flat drills for the job, when the idea occurred to me to make a babbitt socket for each drill, excepting of course those whose shanks were the same size. It did not take long to get the ladle on the fire, and while the babbitt was heating I put a plug, with a spot in the center of it, to locate drill in the hole, to keep the babbitt away from the screw, and a little putty around the top. A piece of flat steel was held in the vise with the ratchet, so that when the drill was lined up with the spindle we could see how near to hold the point to the strip of steel when pouring.

On the straight-shank drills I filed a flat on opposite sides at the end to keep it from slipping in the socket. One of the boys held the drill while I poured in the babbitt. The sockets filled the bill to a "Tee" and can be used again when wanted.

Cleveland, O. CARL HOLMGREN.

DRILL CHUCK WITH BAYONET LOCK.

The sketches show a drill chuck that I made some time ago for an air drill, and afterwards made for our drill presses. I found there was always trouble when the collets were driven

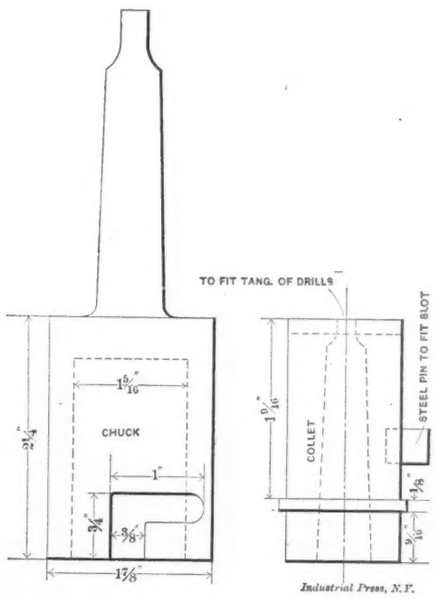

out; now we can leave the chuck always in the drill spindle, and remove the collets with the drills by simply turning them backwards a short distance to disengage the pin from the slot. G. I. B.

SHRINKING A FLANGE ON AN EIGHT-INCH PIPE.

We recently installed a new vertical boiler in our plant, and when we came to put up the 8-inch steam pipe it was found that the U-bend which connected with the top of the boiler was about 6 inches too long. The cast iron flanges were screwed on, and to cut a thread was out of the question. We unscrewed one flange and, after cutting the pipe off with the hack saw, we put a clamp on the pipe about 4 inches from

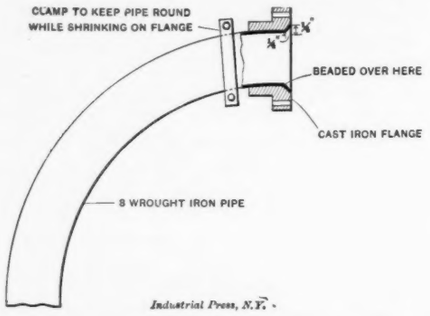
CLAMP TO KEEP PIPE ROUND WHILE SHRINKING ON FLANGE
BEADED OVER HERE
CAST IRON FLANGE
8 WROUGHT IRON PIPE
Industrial Press, N.Y.

the sawed-off end and screwed up till the pipe calipered nearly round. The scale was filed off the outside for about 2 inches back from the end. The flange was bored out 1-64 inch small, and chamfered on the face end ¼ inch back. After shrinking on, the pipe was beaded around while hot. Before putting the pipe on the boiler it was tested to 400 pounds square inches water pressure, and it never sweat a drop. Needless to add that after turning on the 160 pounds steam no calking was necessary.

GEO. R. LANG.

Cincinnati, Ohio.

CASEHARDENING WORK IN PART.

It sometimes happens that only certain parts of a piece are wanted hardened; it may be because these are to resist wear while it is desired to drill or further machine certain features. In such cases it is convenient to be able to caseharden just so much of the piece as may be desired. The trick of doing this was well known years ago, but has passed out of memory pretty generally until the bicycle business developed so enormously a few years ago, when it was revived in connection with the manufacture of parts.

The trick is very simple and can be readily done in almost any shop. It is only necessary to cover the spots or places which it is wished to keep soft, with a thin coating of copper. Carbon does not penetrate copper, and, as the process of casehardening is only one of carbonizing the surface of iron, it follows that a deposit of copper will preserve the part under it from the hardening effect.

A good way to apply the copper is by means of the electrolytic bath. A bath of copper sulphate (blue vitriol) is prepared, in which the piece to be treated is suspended from the negative pole of an electric battery, opposite a sheet of copper suspended from the positive pole. After a sufficient thickness has been deposited the copper may be buffed from the parts which are to be hardened; or, as is usually more convenient, the part to be hardened is coated with wax or some easily removed varnish, and then placed in the bath, the wax or varnish being afterward removed by heating or otherwise. No copper will be deposited except where the metal was exposed to the action of the bath.

O. M. B.

[Another method of casehardening a piece in part, that is used considerably in locomotive works, is to use the bone pack as usual but not to plunge the piece into cold water when dumping it from the box. Instead it is left to cool off, and then the parts that are to be left soft are machined to remove the carbonized skin. A rocker pin, for instance, will be roughed out on all parts save the bearing in the link-block, which will be turned to size with the allowance for grinding. The pin is then "packed" as usual, and carbonized, but as already stated, it is not hardened first off. The taper fit in the rocker arm is turned, the thread cut on the end and the head is finished. When the pin is again heated and dipped, only the bearing in the link-block hardens since the carbonized skin was removed from all other portions.—EDITOR.]

OLD METHOD OF MAKING SPHERICAL ROSE REAMERS.

While in conversation with an old gunsmith recently the subject of making tools came up, and I asked him how he made the rose reamers used in making bullet molds. He said the process was very simple, and described it as follows:

First take an old flat file, 10 or 12-inch, soften it, grind or file off the teeth on one side and edge, and then drill a hole as at *A* of the size of the reamer desired. File a slot *B* the thickness of the reamer neck, then harden and temper the file. After turning the reamer as nearly to size as can be

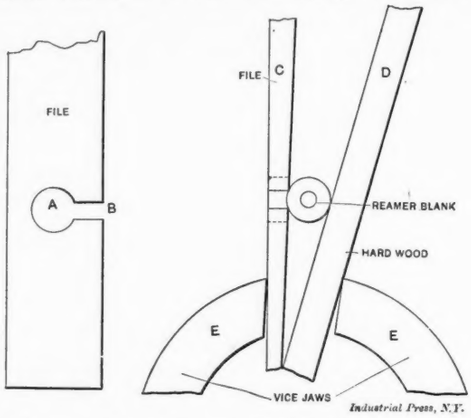

accomplished easily, place it with the file *C* and a piece of hard wood *D* in a vise with the reamer blank as indicated. Turn the reamer blank steadily with a bit-brace or other convenient means, and very soon you will have a blank reamer truly round. The spring of the wooden piece *D* will force the blank as it is turned through the hole in the file, the edges of the hole in file cutting away the metal. The reamer teeth are then filed in with the proper shape files, and then tempered.

F. H. JACKSON.

JIG FOR SLOTTING SCREW HEADS.

A correspondent describes in the *Mechanical World* a simple and apparently excellent jig for holding screws for slotting the heads. It has the great advantage of holding each screw with the same grip, no matter if the diameters are not uniform. It consists of the angle plates *C* and *D*, both having tongues underneath to fit the slot in the milling machine table, and in *D* is fitted the binding screw *E* and the guide, *B*, which latter are securely fixed. The guides carry the V-

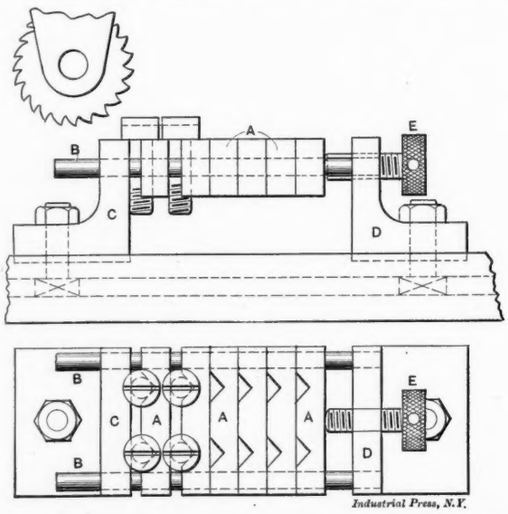

blocks *A*, between which the screws are clamped. The guides slide freely through the holes in the angle plate *C* and may be made whatever length desired to accommodate the number of V-blocks and screws. If the full capacity of the jig is not required, say only four screws are to be slotted, as shown in the cut, the angle plate *C* is moved toward *D* so that the binding screw *E* shall be long enough to clamp the screws. In fact the arrangement is a most flexible one, and should prove a very satisfactory rig for the average shop.

HOW AND WHY.

A DEPARTMENT INTENDED TO CONTAIN CORRECT ANSWERS TO PRACTICAL QUESTIONS OF GENERAL INTEREST.

Give all details and name and address. The latter are for our own convenience and will not be published.

40. A. L. G.—In the description of the Bullock shop in the February, 1904, issue, you say the boring-mill device or attachment for boring spherical seats can be used to generate cycloid curves. How is this done?

A.—By feeding the bar on the fixed slide downward at one-half the rate of the bar on the movable slide the tool in the latter bar will be made to travel in a cycloid curve.

41. "Solder."—Is there a process of soldering without heat, and, if so, what is it?

A.—A so-called soldering process without heat is given, but we cannot vouch for its efficiency. To 1 ounce of hydrofluoric acid add 8 ounces of brass filings and 8 ounces of steel filings (or proportional amounts). Apply to the parts and clamp together for some hours. Hydrofluoric acid must be handled with great care and must be kept in lead bottles as it dissolves glass.

42. A. L. P.—How is the coppering done such as is seen on cast iron toys, etc.? Is it done by electroplating?

A.—For a specific answer we refer the question to the readers. The process is not that of electroplating, but is done by dipping the parts into a bath of melted copper. The parts are heated to a high temperature, and the melted copper is said to be covered with a layer of cryolite and phosphoric acid to act as a flux and prevent oxidation. Perhaps a little experimenting will enable you to do the work successfully.

43. X. Y.—What is the best way of starting and stopping a dynamo that is connected to the main shaft?

Answered by Wm. Baxter, Jr.

A.—The best way of starting and stopping a dynamo, whether belt driven or direct connected, is to set it in motion with the main switch open, and open the main switch before stopping. In starting, after the machine has run up to full speed, see that the voltage is up to the proper point, and if it is not, adjust the field regulator until it is. When the voltage is at the proper point, close the main switch and then throw the load on gradually by closing the switches that connect the motors, lamps, etc., supplied by the generator. In stopping, the main switch should be opened first, so as to obviate the liability of starting up again with the main circuit closed. As a rule, no harm is done when a single generator is in use, if it is started with the main switch closed, but if the circuit happened to be short-circuited some damage might be done.

44. C. L.—1. Kindly state how to make formed milling cutters and circular forming tools of broad face, say from 1 inch face up. Does it need an extra stiff lathe, and are they made with a master tool of the full length of the face? I am troubled by the tool digging in, leaving a ridge. 2. How are the shear blades of large squaring shears, say 10 inches long, hardened without excessive springing?

A.—Formed milling cutters and circular forming tools may be finished either with a master forming tool, or else (as a makeshift) by the use of several radius or other forming tools, by which the piece can be shaped to fit a templet. A forming tool is used to remove only a small

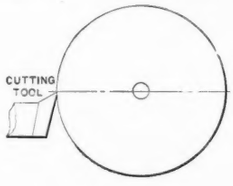

Fig. 1

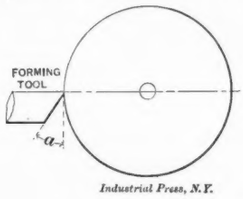

Industrial Press, N.Y.

Fig. 2.

quantity of stock, after the piece has been brought to nearly the proper shape with an ordinary lathe tool. If you attempt to take much of a cut with a forming tool you will be sure to meet with the trouble mentioned. Another thing that is absolutely essential is to have both lathe and work as solid and rigid as possible. Still a third principle is to give the forming tool more clearance than is customary with a lathe tool. This is illustrated, in an exaggerated manner, in the sketch herewith. In Fig. 1 is shown a lathe tool. This is ground with top rake, and therefore only a small amount of clearance is necessary to give a cutting point. In Fig. 2 is a forming tool, which can have no top rake because, in order to retain their shape, such tools should have a flat top face which can be set horizontally on a line with the center of the work. In order to cut satisfactorily, therefore, the sharp cutting edge must be produced by giving more clearance underneath, as shown at *a*.

The second question is answered as follows by Mr. E. R. Markham:

2. As a rule the hardening of this class of work is attended with more or less trouble when attempted in the shop not specially fitted for it; yet if care is exercised and a method used which is adapted to the character of the piece the trouble from springing may be materially reduced in most cases. If the blade is made from a comparatively high carbon steel the tendency to spring will be greater than if a low carbon steel is used; but the blade will last a great deal longer, the higher carbon steel making much the best blade. If possible, rough-plane the blade and cut the screw slots shown in Fig. 3 nearly to size before annealing, to remove the internal strains as far as possible before the operation of hardening. When heating for hardening, place the blade in a hardening box and heat in a furnace, if one is at hand. In this manner a uniform heat may be attained. But if obliged to heat in a forge of the ordinary type, build a large, high fire, so as to have as nearly as possible a uniform heat. The edges and corners should be no hotter than the balance of the piece or the uneven heat will cause them to crack, from uneven contraction when plunged in the bath.

Fig. 3.

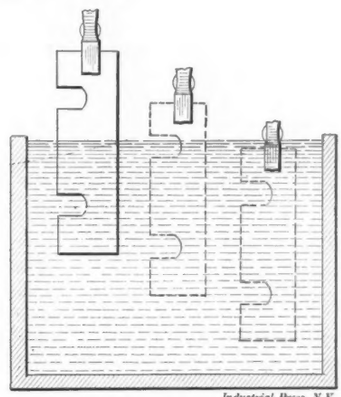

Industrial Press, N.Y.

Fig. 4.

The bath used should be brine which is of a temperature of about 60 degrees F. Grasp the blade by one end with a suitable pair of tongs, dipping it in the bath in a vertical position, as shown in Fig. 4. It should be lowered slowly into the bath and moved edgewise while being lowered, as shown by dotted lines. This brings the cutting edge in contact with the fresh, cool contents of the bath and allows the steam which is generated to pass from this edge to the one containing the slots. This action of the steam leaves the cutting edge so it can be freely acted upon by the bath and the steam forming a cushion at the other edge prevents that from hardening as rapidly as it otherwise would, thus preventing springing, or at least reducing the tendency to the minimum. Moving the blade in the bath as described has the same effect as when a "half round" reamer is dipped in the hardening bath on an angle, the heavier portion being down and subjected first to the action of the bath. In the case of the blade it is moved along in the bath, the cutting edge being kept in contact with the bath and free from steam. Be very careful that the flat sides are exposed evenly to the liquid, or excessive springing in one direction or the other will result.

There are other methods but most of them require special apparatus and consequently are of little value in the ordinary shop.

NEW TOOLS OF THE MONTH.

A RECORD OF NEW TOOLS AND APPLIANCES FOR MACHINE SHOP USE.

TRAVERSE SHAPER WITH PULL-CUT HEAD.

The machine illustrated herewith, built by the Cincinnati Shaper Co., Cincinnati, O., differs from the ordinary type of traverse shaper in that the cutting tools are reversed, the cutting taking place during the backward motion of the ram and the quick return during the forward motion. With the exception of the head, the ram and a few other modifications that have been deemed necessary, it is similar to the ordinary push-cut shaper manufactured by this firm. The construction of the head is such as to make it rigid and strong, to resist any tendency to yield or spring under cutting strain. The strain comes directly upon solid metal and not upon threads, bolts or screw points, except in the case of the setscrews that hold the tool, which, however, are large in diameter and have a long bearing.

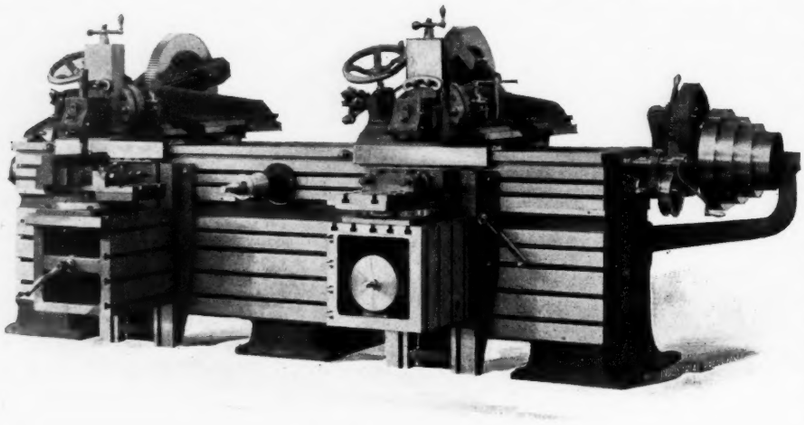

New Draw-cut Shaper.

The special features of the machine are that the pressure or thrust of the tool is taken directly back against the bed and tends to draw the table and apron more closely to the bed rather than to force them apart. This the builders inform us is a decided advantage, especially when heavy cutting is being done, as is the case when using high-speed steels. In many cases, too, the work can be pressed directly against the bed, so that resistance to the cutting is not altogether dependent upon the hard clamping of work and table. Large pieces can also be bolted directly to the bed, the tables being removed—a distinct advantage in certain classes of work.

EIGHT-INCH PIPE-THREADING MACHINE.

In the design of this machine, the product of the Stoever Foundry & Mfg. Co., Myerstown, Pa., careful attention has been paid to the strength of the working parts, as it is subjected to very severe strains and usually operated by unskilled labor. The headstock is a single casting, insuring rigidity and also permanent alignment of all the bearings. The bed, as will be seen in the half-tone, is very heavy and well braced.

The capacity of the machine is from 2½ to 8 inches, inclusive, a separate set of dies for each size of pipe. There are therefore nine sizes of pipe that it will cut, and the machine has been designed with one speed for each size of pipe. Most machines have but six speeds for the nine pipe sizes. The nine speeds are obtained through a gear box having five separate speeds, and a double clutch on one of the shafts throwing between two trains of gears having different ratios. The clutch is an improvement over the sliding gears commonly used, as it will throw over at any point, whereas the gears will slide into mesh at only a few points.

The chucks are of the 3-jaw independent type, both front and rear chucks being provided with jaws for gripping the pipe. The faces of the slides are graduated, facilitating the setting of them to any particular size of pipe. Special grips for holding flanges or flanged fittings are placed on the slides of the rear chuck, by use of which the fittings can be made up on the pipe much more quickly than by hand, and with a much tighter joint.

By the use of a single driving pulley a constant belt speed is obtained, which is designed for the maximum work. The machine can be placed either in line with, or at right angles to, the countershaft, and a motor can be attached in the simplest manner. The gear box mechanism is operated by two levers and consists simply of a cone of gears on one shaft and a sliding pinion connected with the driving shaft, which pinion can be brought to mesh with any of the cone gears. The case is oil tight, and a small amount of oil will keep the gears lubricated for a long time.

The use of an internal driving gear is another feature, and adds to the appearance of the machine, as well as to its safety. This design also brings the gears close to the body of the machine. All the gearing can be quickly removed without disturbing the other parts—an important point when possible accidents are considered.

The die head is of improved construction. The cams are of steel, hardened and inserted in the ring. They are interchangeable in the same ring, and, when necessary, can be replaced at a very small cost. This prevents the dies from losing their gage through wear of cams. The bottoms of the slots in which the chasers travel are formed by hardened steel plates, as a precaution against their getting out of lead. The adjusting mechanism is an improved arrangement of the levers by which the hand nut on the adjusting screw is placed directly in front of the operator. When the handle is pushed downward the lever rests on the screw, as shown in Fig. 2, which results in bringing the screw and the lever in a straight line, regardless of the extent of the adjustment. When in this position the dies are fully closed and any upward movement of the lever will release the thread without causing the dies

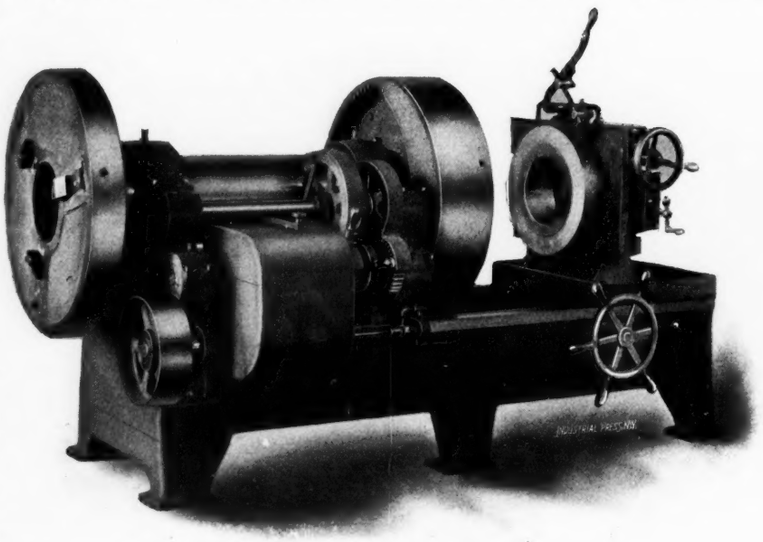

Fig. 1. Pipe-threading Machine with Novel Features.

to dig into the work—a fault that is sometimes experienced with this type of mechanism.

The cam ring shown in Fig. 3 is from a 12-inch machine, but the construction is the same in all sizes, the difference being that the 8-inch ring has 7 cams and the 12-inch ring 9 cams. The cams are made from forgings and hardened after finishing, making them practically indestructible. They are held in the ring by bevel keys which are held by fillister head screws through the outside of the ring. These keys draw the cams tight against the body of the ring and they cannot possibly get away.

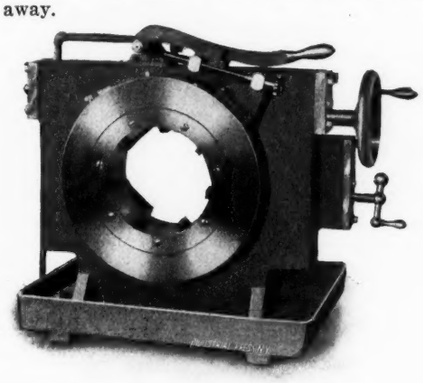

Fig. 2. Adjusting Mechanism, Stoever Foundry & Mfg. Co.

The dies are removed from the head through the center when the head is expanded to its extreme limit. To prevent the upper dies from falling out spring pins are placed in the ends of the upper cams, these pins engaging the slots in the dies as they disengage from the adjoining cam. A slight pull on the die will release it from the pin.

The machines are now being built in the following sizes: No. 4, capacity 1 to 4 inches; No. 8, capacity 2½ to 8 inches; and No. 12, capacity 4 to 12 inches.

BLUEPRINTING MACHINE.

A vertical cylindrical blueprinting apparatus in which the electric arc is used in place of sunlight is now manufactured by the Keuffel & Esser Co., 127 Fulton Street, New York, the well-known manufacturers and dealers in draftsmen's supplies.

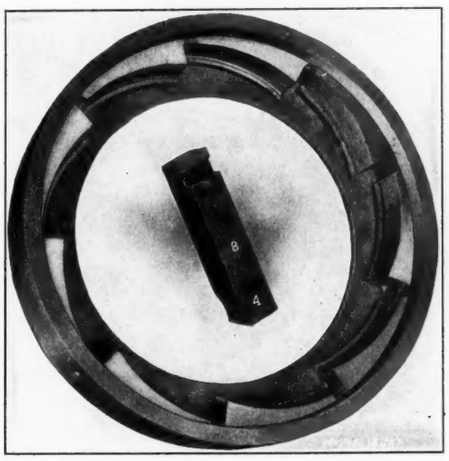

Fig. 3. Cam Ring and one of the Chasers, Stoever Foundry & Mfg. Co.

This apparatus consists of two sections of curved glass, each mounted in a metal casing and together forming a cylinder which rotates on a circular base. The lamp is suspended in the axial line of the cylinder, where it travels by clockwork or by an electric motor.

Tracing and paper are placed on the outer surface of the glass cylinder, where they are held by a canvas curtain mounted on a vertical roller attached to the upright which carries also the lamp and the mechanism for moving it. This curtain is wound on to the cylinder by rotating the cylinder on its base, which is done by a conveniently placed hand wheel. It is held tense by the roller spring and a foot brake on the base plate, which arrests the cylinder. The rotating of the cylinder therefore automatically winds the curtain onto it and holds the tracings and paper in very good contact. The feeding in of the tracing and paper is easily and quickly accomplished, and there is no tilting of the glass cylinder. The unwinding of the curtain is done by means of the hand wheel, assisted by the spring acting on the curtain roller.

The lamp is of a special pattern, to diffuse the light, and the current is cut off automatically at the end of the travel of the lamp.

SEMI-RADIAL DRILL.

The machine illustrated below, recently brought out by the Bickford Drill & Tool Co., Cincinnati, O., has a high ratio of transmission gears and this combined with the simplicity of design and rigid construction makes it well adapted for many

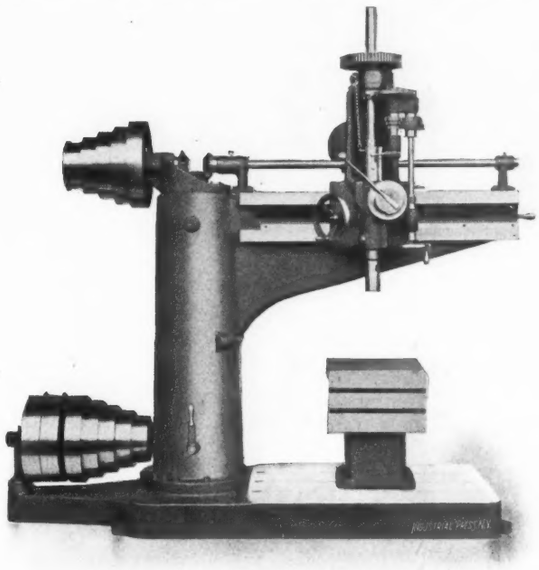

Fig. 1. Bickford Semi-radial Drill.

classes of work. The frame consists of but five parts; the base, column, cap, arm and arm shaft, each of which is proportioned for the continuous severe work expected of the machine. The head is a single casting, and is adjustable on the arm by means of a spiral gear, which gives it a quick easy motion. All bearings on the head are of uncommon length. The spindle, of hammered steel and unusual vertical adjustment, is provided with both hand and power feed, and quick advance and return.

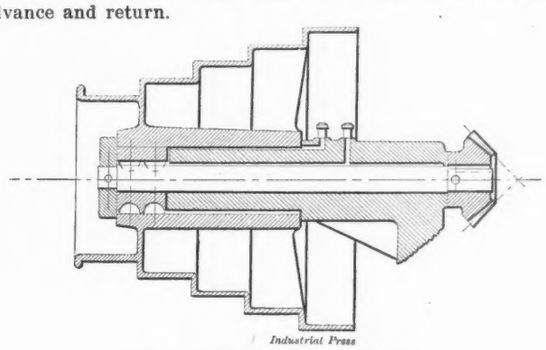

Industrial Press

Fig. 2. Detail of Upper Cone Bearing.

The feeding mechanism furnishes three rates of feed, advancing by even increments from .008 inch to .016 inch per revolution of spindle, each of which is instantly available by means of the Bickford standard drive key.

The driving mechanism contains but seven gears, the pitch and periphery speed of which are conducive to long life. The speeds are five in number and advance in geometrical progression from 50 to 170 revolutions per minute. The spindle has a traverse of 18 inches and the head a range of 3 feet 6¾ inches. The spindle will take work 24 inches high over the

table and 4 feet high over the bedplate. It will drill work in plane of base to center of 8 feet; the width of the cone belt is 3 inches and the countershaft runs at 300 revolutions per minute. The net weight of the machine is 6,500 pounds.

METAL-WORKING PRESS.

The illustration herewith of a new press built by the Perkins Machine Co., now of Warren, Mass., formerly of Boston, Mass., shows a machine designed for the use of automobile manufacturers for trimming their crankshaft forgings, etc.

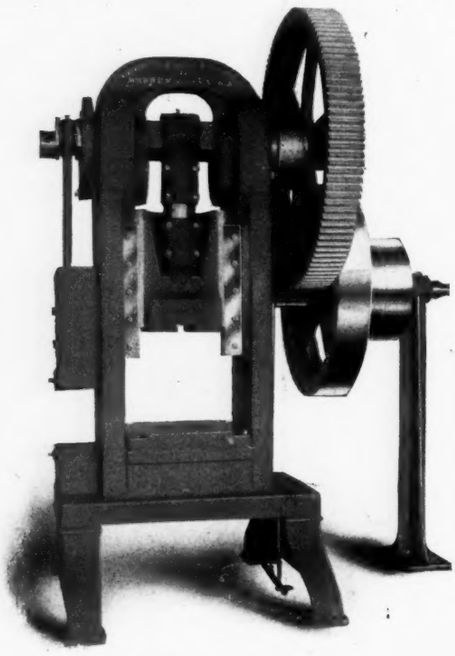

Trimming Press for Heavy Work.

The press weighs 17,300 pounds and is exceptionally heavy and powerful to withstand the strains of the severe duty to which it is subjected in this class of work. The shaft is of selected acid steel of the new process, which is believed to be the best that can be used for the purpose. Although the plunger is very heavy it can be adjusted by one man with little effort. The clutch on this press is of the regular Perkins type, instantaneous in its action and giving a positive drive. The press is self-contained, no foundation being necessary. The weight of the shaft and gear is taken care of by an outboard bearing. The large gear is 6 feet in diameter, with cut teeth. The press is provided with an attachment at the side which cuts the forgings off after being trimmed.

PLATE STRAIGHTENING ROLL.

The straightening roll here illustrated has seven rolls, four in the upper series and three in the lower. Each roll in the

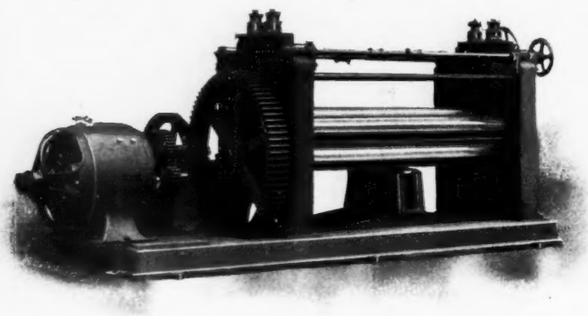

Plate Straightening Roll.

upper series is arranged for either independent or universal adjustment, by means of steel worms and steel screws, which can be done accurately by means of indicators. Either end of any of the top rolls can be adjusted independently by removing the cap over the adjusting screw controlling same. This obviates the necessity of having four or five handwheels placed on different sides of the machine; hence it is operated entirely from one end. The top rolls can be raised high enough for all standard work; but for special work provision can easily be made for raising them any required distance from the bottom roll. The second top roll is placed slightly forward and acts as a pinch roll, which facilitates feeding the plates, and also causes it to exert a compressing and stretching pressure. The front and rear top rolls are smaller than the principal rolls, as they perform comparatively light duty; hence, they are placed closer to the adjacent rolls than they could be if larger, and are therefore more effective on the outer surface of the plates, especially on light plates. The machine is also arranged for curving or bending, the same as a regular bending roll, and it is also built with either eight or nine rolls, if desired.

The housings and gears are amply strong, and the pinions are made of cast steel. It has a heavy base plate, supporting a roller center-bearing for the lower rolls. The entire machine is self contained. It is provided with motor, engine or belt drive, and is made any size for plates from ⅛ inch to 1½ inch thick. It is built by Bertsch & Co., Cambridge City, Ind.

SHAPER WITH NEW STYLE OF DRIVE.

A 16-inch shaper, manufactured by the Stockbridge Machine Co., Worcester, Mass., is shown in the accompanying illustration, with an electric motor attachment which presents something new in the way of a belt drive. This style of machine is built in three sizes: the 16-inch size, shown, and the 20 and 24-inch.

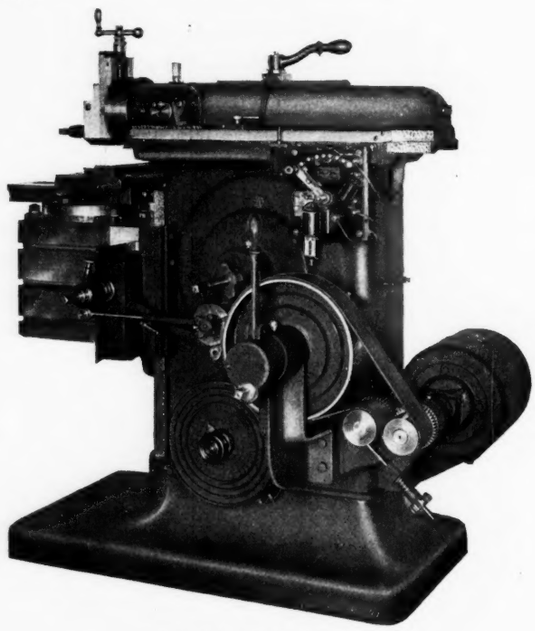

"Stockbridge" 16-inch Shaper.

It will be noted that the driver and idler pulleys are geared together, so that both drive the belt positively, and that by means of the adjustment any degree of tension can be put upon the belt. The idler is hung on a bell-crank lever which can be swung around until the belt has an arc of contact on the driving pulley almost equal to the full circumference of the pulley. This drive has proven, under practical tests, to be as positive as a chain drive which has the advantage of a slight flexibility of the belt. As far as we know this is a new idea in belt drives, and, like other things, is so simple yet effectual that it will probably be wondered why it was never thought of before.

TWO DRILLS ADAPTED FOR SPECIAL WORK.

Baker Bros., Toledo, O., have sent us photographs of two of their heavy drills adapted for the production of miter gears and automobile sprockets.

Fig. 1 shows their "K" machine for the production of 15½-inch steel casting automobile sprockets. Owing to their be-

ing notched and very thin it is difficult to turn these sprockets in a lathe and only from six to ten sprockets can be so turned in nine hours' time; but with the drill made by this company 65 sprockets have been produced in that time. This is accomplished by the use of a forming cutter that is set with a shearing cut. The casting is drilled with six holes to a jig, which corresponds to a fixture attached to the table of the drill having six projecting pins that exactly fit these holes. The

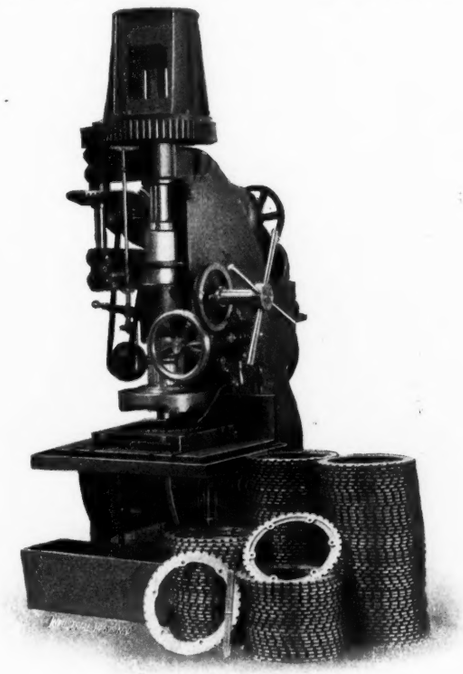

Fig. 1. Style "K" Drill, Baker Bros.

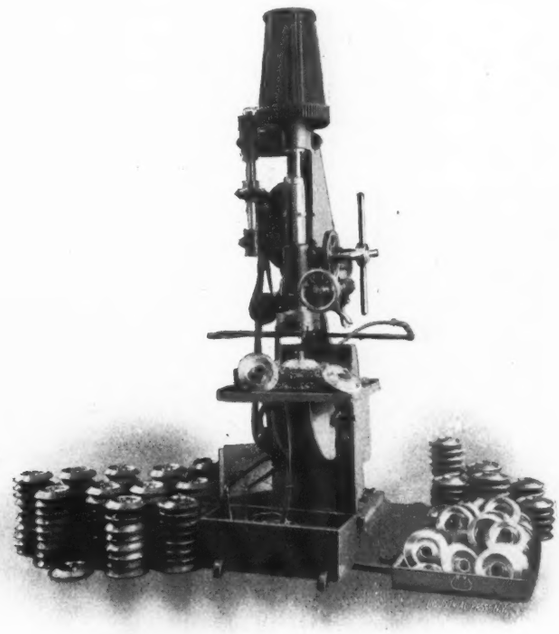

Fig. 2. Style "M" Drill, Baker Bros.

casting is placed over these pins and the head, with forming cutters, is brought down on same, facing one side and reducing it to the proper diameter. The casting is then turned over and finished on the other side in a similar manner. The work is turned out within a limit of .003 of an inch.

Fig. 2 shows their "Style M" drill working on miter gears of drop-forged steel, 8½ inches in diameter, 1¼ inch face. The blank is first bored and two keyseats cut in same. The hole and keyseats just fit an arbor and fixture that are securely fastened to the drill table. The keys act as drivers for the work, so that little time is consumed in chucking and taking out the finished parts. The gears are finished all over in three operations, within a limit of .003 of an inch and at the rate of twenty-five in nine hours.

These drills are especially adapted to a large line of automobile work, such as boring cylinders, boring and facing jack-shaft hubs and casings, sprockets, spur and bevel gears, etc. They are very massive to eliminate spring, and being equipped with spur gear drive and a very powerful feed, heavy cuts can be taken at high speed without springing or chattering.

facture of agricultural implements, automobiles, wagons, car trucks, etc. In most cases, the bending and forming of the iron parts used in these products must be done while the iron is hot. In deep bends, should the speed of the crosshead be too great, those portions of the article being bent which are not encompassed by the dies will be distorted by their own momentum. In order therefore to obtain the speed and length of stroke best suited to the work in hand, this machine is provided with three different lengths of stroke, and four variations in speed, as noted below. The machine is furnished with a powerful patented friction clutch, which may be operated automatically so that the die slide will always stop in a position furthest away from the die bed, or it may be set to be operated by hand, in which case the operator may start or stop the machine at any part of the stroke, allowing of "coaxing" operations, as they are called, which are quite frequently needed for compli-

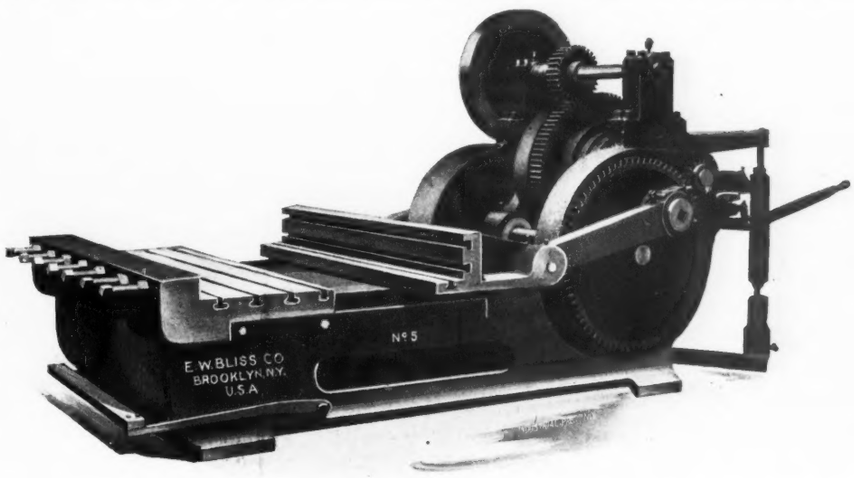

Horizontal Double-crank Bending Press, E. W. Bliss Company.

LARGE DOUBLE-CRANK BENDING PRESS.

A machine quite similar in appearance to the "bull dozer," but possessing several distinct features not to be found in this type, has been brought out by the E. W. Bliss Co., Brooklyn, N. Y. It is a horizontal double crank press designed to do all the kinds of bending, either hot or cold, required in the manu-

cated bends, the change from one method to another being very easily and quickly effected. As now built, two flywheels are employed instead of one.

The general dimensions are: Weight, 25,000 pounds; diameter and width of flywheel, 32 x 4 inches; weight of flywheel, 600 pounds; width of slide and bed, right and left, 72 inches;

strokes of slide, 14, 16 and 20 inches; number of strokes per minute, 6, 12, 18 and 25; total height 84 inches; floor space over all, front and back by right and left, 150 x 70 inches.

MOTOR-DRIVEN ENGINE LATHE.

The accompanying illustration shows an 18-inch Le Blond engine lathe driven by a size 5 I shunt-wound Crocker-Wheeler motor. The motor is supported on a special housing and the drive

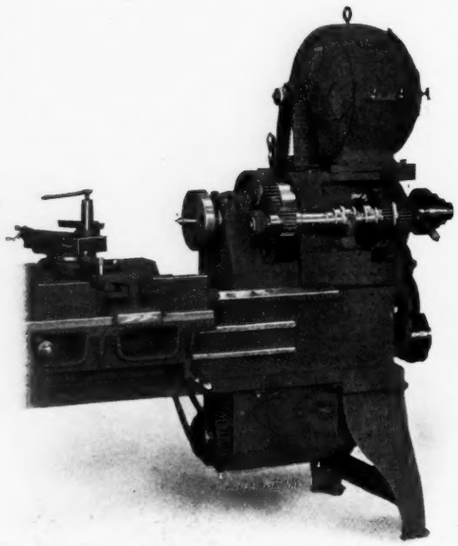

Motor Attached to Le Blond Lathe.

is by means of a Morse silent chain from motor shaft to main lathe spindle. The speed control is accomplished by the Crocker-Wheeler multiple system, using in this case a size 40 M. F. 21 controller, giving a range with the controller of 21 speeds. Only a portion of this range is used as working speeds, the entire range of the tool being increased by a double back gear attachment which permits a total speed range of from 410 revolutions per minute of the spindle to 5.75 revolutions per minute.

With this entire range three runs of gearing are provided, one being direct and the other two through back gears. Each of these various runs is controlled by a friction clutch, the lever for operating which is located in front of the headstock. About 40 speeds are provided with 2.8 horse power, available at any speed between 20 and 410 revolutions per minute of the spindle. For the heaviest working range of the tool, however, namely: 28 to 124 revolutions per minute, 3.4 horse power is available.

A feature of this equipment is that it affords speeds to properly use these high cutting speeds and gives ample power at all speeds without an excessively large motor.

MILLING MACHINE WITH LONG ARBOR.

The milling machine illustrated herewith is designed to carry cutters at a greater distance from the driving head than is possible in the usual standard types of machines. Cutters can be placed about 36 inches from the spindle head, which is very convenient in milling slots in pieces about 30 inches long—the class of work for which the machine was intended. The machine is very heavy and substantial, and weighs 8,500 pounds.

The work table is 32 inches long by 18 inches wide, and has a movement of 12 inches at right angles to the spindle. It is provided with four automatic feeds as well as hand movement; is operated by two parallel screws and has an automatic stop. The saddle which carries the work table has a movement on bed of machine of 32 inches. This is moved by a screw; the hand wheel being provided with a graduated dial.

The spindle and outer support are moved simultaneously by screws from the crankshaft shown at the top of machine, also provided with a graduated dial, and the adjustment is such that the center of spindle can be brought within 2½ inches of work table surface and 13 inches above. The spindle is driven by a 4-inch belt running on a 14-inch pulley, compound geared to the spindle in the ratio of 10 1-10 to 1.

The machine is provided with a pump, oil tank and piping, fitting it for steel work. The outer support for spindle is provided with a longitudinal movement sufficient to allow the placing and removal of cutters without disturbing its alignment.

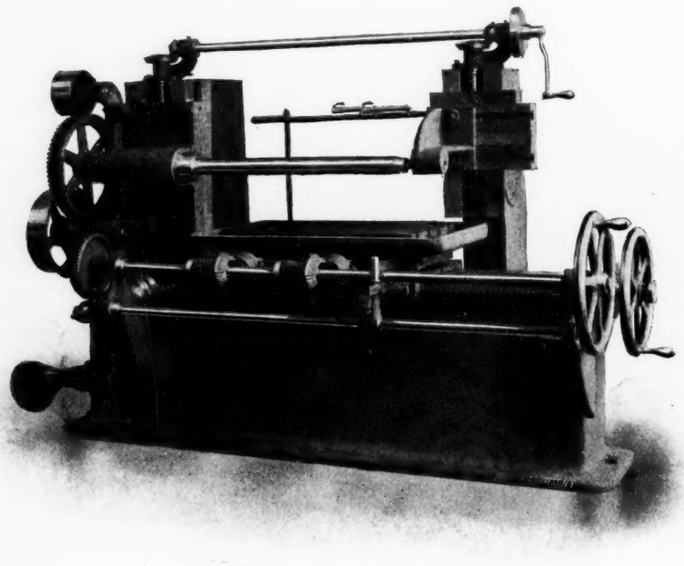

Special Milling Machine made by the Beaman & Smith Company.

The same belt which drives the spindle also drives the feed works and by the use of an idler above the spindle, the vertical adjustment of spindle does not alter the tension of the driving belt which is taken from the countershaft and runs about 140 revolutions per minute, with tight and loose pulleys of the usual equipment. The machine was built by the Beaman & Smith Co., Providence, R. I.

THE BURR COLD SAW.

A new and larger size of cold saw has been designed and recently placed on the market by John T. Burr & Sons, Brooklyn, N. Y. This is being manufactured to meet the demands

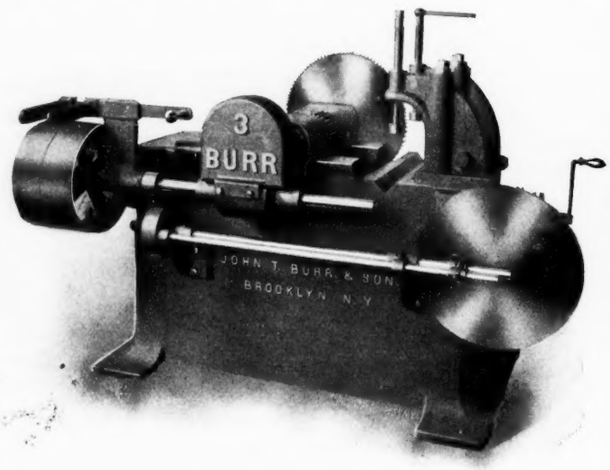

Cold Saw, John T. Burr & Son.

for a saw for larger work than can be done in their smaller saws. This machine has a capacity up to 6 inches. The frame, as will be seen in the illustration, is low, to facilitate the placing of the stock on the machine. The drive is through a steel worm, provided with a ball thrust bearing, a hobbed worm-wheel and a pair of steel pinions. The feed is of the friction type and gives a complete range from slowest to fastest by simply changing the position of the friction roller. The car-

riage is very heavy, is substantially gibbed to the bed and has a travel of 8 inches on the bed. The saw is 16 inches in diameter and ⅛ inch thick. A grinding attachment is provided with each machine, which may be quickly removed when not in use. The emery-wheel spindle is driven by a belt from the pulley on the driving shaft. The saw is placed on the grinder slide, which is provided with an adjustable stop, so that each tooth may be ground to exactly the same depth, and a tooth gage, as in a cutter grinder, registers the teeth to the wheel. The machine weighs about 1,500 pounds.

SPECIAL SURFACE GRINDER.

A new departure in surface grinders is that recently brought out by the Springfield Mfg. Co., Bridgeport, Conn., for accurately grinding surfaces more or less open, like engine and pump valves, textile plates, etc. The wheel of this machine has a broad face and passes over the work at many different angles, which is accomplished by the table revolving and the

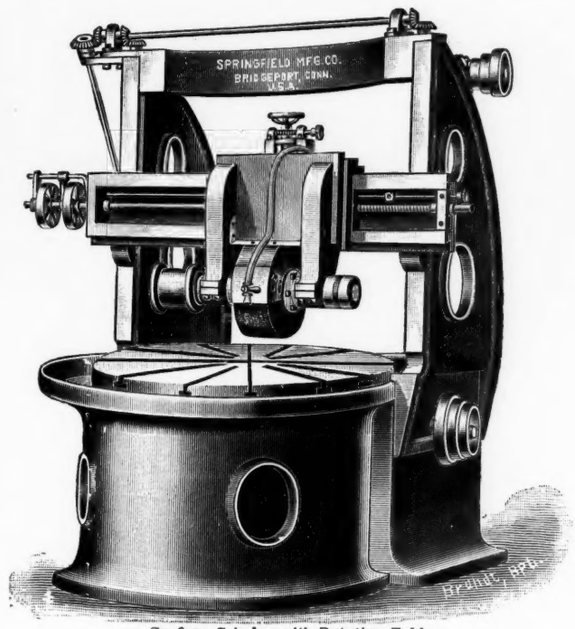

Surface Grinder with Rotating Table.

wheel oscillating from side to center of the work, thus overcoming the trouble experienced in getting accurate work on surfaces more or less perforated. In many cases of surface grinding the wheel is liable to grind the inner edges more than the body of the work, but with this machine a perfectly even surface is secured. The manufacturers also state that surfaces on square segment or round dies can be ground on this machine at a greatly reduced cost.

The construction is, in some ways, similar to that of a boring mill, and is made clear in the cut herewith. The table rests on V-ways and is operated by worm and worm gear. Provision is made for oiling the ways through the table. The wheel head works either automatically or by hand, from side to center of the rail, and is operated with a screw driven by two pulleys, which in turn are driven by one straight and one cross belt. On the shipping rod, which runs parallel to the screw, are two adjustable dogs which govern the travel of the wheel, and any desired length of travel from side to center may be obtained. The cross rail which carries the wheel head is operated by elevating screws and the wheel head is also operated by an elevating screw and attached to it is a micrometer feed admitting of less than one-eighth of one-thousandth inch, if desired. The machine is designed for and equipped with water attachments and is built in three sizes to grind work 24, 40 and 60 inches in diameter.

SURFACE PLATE SET.

The illustration herewith shows a surface plate set consisting of surface plate, straightedge, and knee or angle plate, all of which are scraped accurately and to a degree of perfection which the makers—the Hazelton & Donald Machine Co., Philadelphia, Pa.—guarantee to meet the most exacting tests. There are also four setting-up blocks, to be used where it is desired to set pieces for testing clear of the surface plate. Two knurled grips are furnished to facilitate handling the plate, where it may be used as a rubbing or testing plate on milling machine standards or like surface work. A hardwood case is furnished with the set, which makes an inclosure for the plate when set on the bench for general use. The set is intended as a comprehensive outfit for jig and tool room work.

In designing the plate the makers use features of construction on which they have made application for patents. The common method of surface plate construction is that of an open or broken ribbing in combination with a 3-point support. With this form of construction there is a tendency for unsupported parts of the plate to sag and to assume a different degree of deflection when on the 3-point support from what is the case when it is held by the handles in an inverted position.

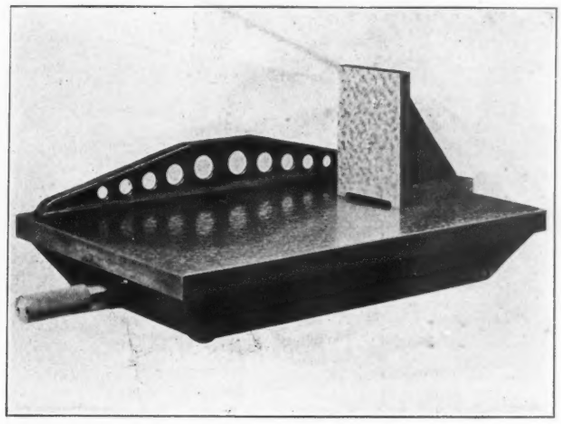

Hazelton & Donald Surface Plate Set.

In the Hazelton & Donald plate the ribbing is of a deep closed rectangular system, so proportioned that whichever side of the plate is uppermost the accuracy is maintained. For its support the surface plate proper rests upon five points, distributed in suitable positions, to insure equal support to the whole mass. Two of these corner supports rest upon two like solid points of a frame which is constructed as a 3-point support. The two opposite corners rest upon the arms of a lever which, in turn, rest upon a fulcrum located at such a distance from the center of the plate as to compel the equilibrium of the surface whether loaded with work or not. This same lever also has an arm for the support of the center of the plate. Owing to the proceedings for securing a patent upon this arrangement, full details are not yet available.

ELECTRICALLY-DRIVEN BUFFING LATHE.

A new line of buffing lathes and dry grinders (see next page) has been placed on the market by the Bridgeport Safety Emery Wheel Co., Bridgeport, Conn., who provide the grinder portion, while the Crocker-Wheeler Co. furnish the motor equipment. Instead of extending an ordinary motor spindle and making a base to fit the motor, the emery wheel builder supplies shafts upon which the Crocker-Wheeler Company mount their armatures. The shaft is larger and stronger than necessary for an ordinary motor shaft and supported by unusually long bearings to secure rigidity against the vibration to which these tools are subject. The design of the motor is slightly modified to make the two a harmonious unit in every particular. Machines of this class must of course be fully inclosed, and the problem of cooling by air is a serious one. This has been solved by having the lower half of the motor open directly into the base casting. The air contained in the inside of the base is thus added to the quantity that circulates around the inside of the motor, and enables it to run much cooler than an ordinary fully inclosed motor of the same size and capacity. By this means of inclosure from five to eight times as much cooling air is available as in ordinary fully inclosed motors of equal power, the base also giving an increased surface from which to radiate the heat.

The armature and brush mechanism is covered with an end shield, split horizontally. The lower half contains the brush holders and wire connections; the upper half is attached to the motor frame by cap screws. This upper half of the frame can thus be readily taken off, giving quick and easy access to the armature and brushes.

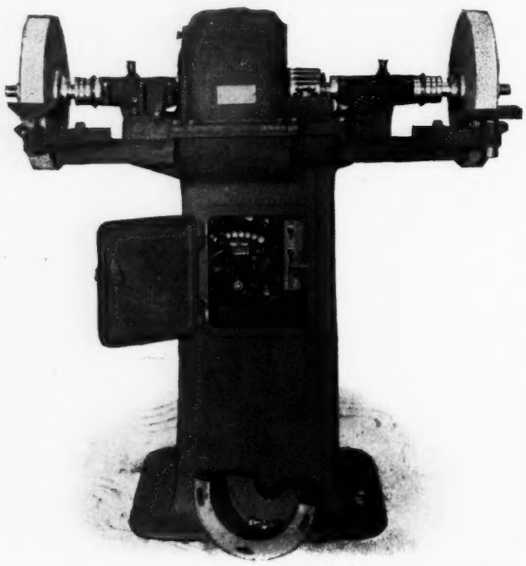

Buffing Lathe, Electrically Driven.

The machines are equipped with ring oiling bearings. On the outer end of each box is a dust-proof collar, held in place by a key with two ring nuts, to compensate for end wear and thrust of the spindle.

INGERSOLL-SERGEANT FORGE.

We show herewith an illustration of the Macdonald forge, for use chiefly in heating rivets, but which is very handy when doing any general outside steel construction work upon which pneumatic tools are used and where compressed air is therefore available.

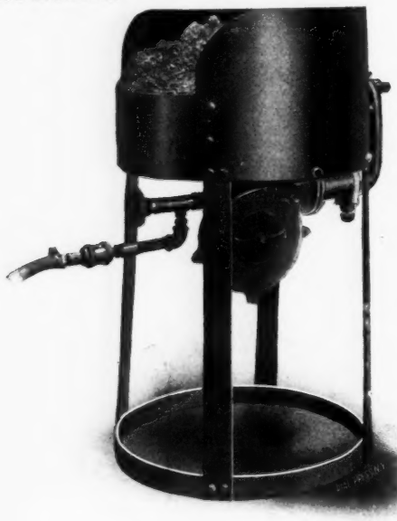

Fig. 1. Forge for Heating Rivets, etc.

The details of construction of the blower and jet are shown in Fig. 2. A small volume of air issues from the jet at a high velocity, which, by giving the blower a rotary motion, induces a mild blast of a large volume of air, such as is required to give the best results in producing a bright fire. In other words, a small volume of air under high pressure is converted into a large volume of air under low pressure.

This forge is manufactured by the Ingersoll-Sergeant Drill Co., 26 Cortlandt St., New York City.

A NEW SCREW-CUTTING BENCH LATHE.

There seems to be a growing demand for an accurate and reliable bench lathe that can be bought at a moderate price and at the same time is a complete screw-cutting lathe, suitable for laboratory, electrical, optical, model, experimental work, etc. The "Star Special" screw-cutting bench lathe shown by the accompanying half-tone has been built by the Seneca Falls Mfg. Co., 330 Water St., Seneca Falls, N. Y., to supply this demand.

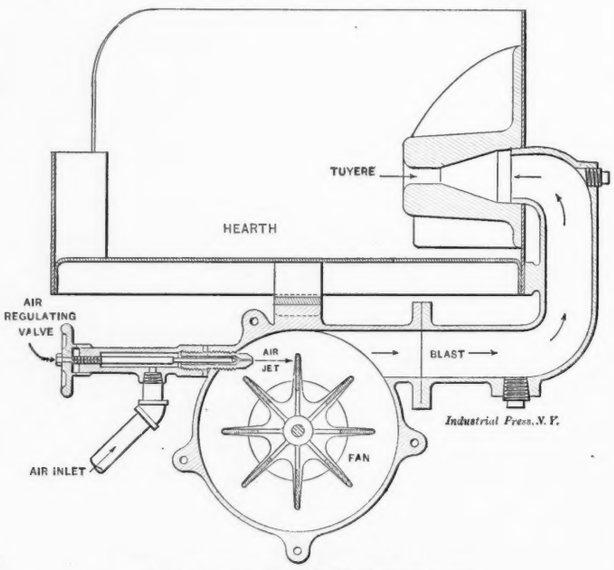

Fig. 2. Details of Construction of Forge.

The headstock has a large hollow spindle, made from a crucible steel forging, with draw-in chuck for split collets up to ½ inch capacity and phosphor-bronze boxes with improved end-thrust ball bearings; the cone pulley has three steps for wide belt. A push pin on the head gear allows the cone to be locked or unlocked without using a wrench. The tailstock is the curved or cut-under pattern.

The carriage has long bearing on the ways, and is gibbed to bed both front and rear. A cam-locking device locks carriage to bed when using cross-feed. The cross-feed screw has a graduated collar which reads in thousandths of an inch and can be set at zero in any position. Plain and compound rests

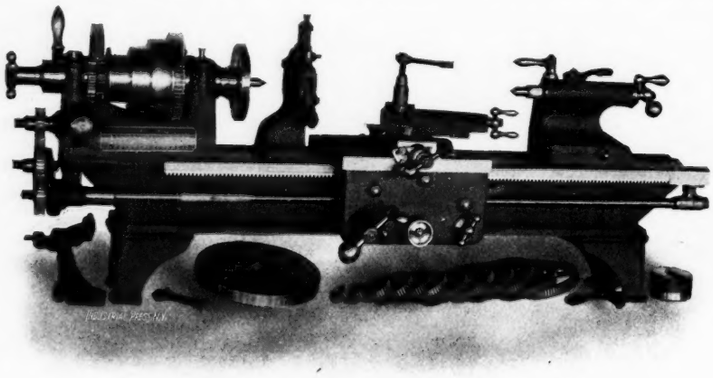

"Star Special" Bench Lathe.

are regularly furnished and easily interchange. The base is graduated 180 degrees and renders the compound-rest capable of fine adjustment. The toolpost has patented collar and shoe which exclude dirt and chips, and admit of quick and secure adjustment of the tool.

The automatic cross and longitudinal feeds are actuated by a phosphor-bronze worm on the leadscrew, which is splined and acts as a feed rod. The range of feeds is large and the range for screw-cutting is extra large, cutting all standard threads, right or left (including 11½ and 27), from 3 to 64, without compounding the gears, and nearly all threads by compounding. The lathe will be supplied, if desired, with

transposing gears and index for cutting International Standard Metric threads; or it can be fitted for cutting metric threads alone. The change gears are held in place by split washers and spring nuts. The lathe is rated as 9-inch swing, but will actually swing 10⅛ inches and 24 inches between centers. The countershaft has friction clutch pulleys. A large number of attachments are built for this lathe, so as to make it of as great utility as possible for a wide range of work, and it is supplied with the usual faceplates, rests, etc.

FARWELL MILLING ATTACHMENT.

The half-tone on this page illustrates a new use for the Farwell milling attachment—that is, the hobbing of bronze wormwheels. The Adams Co., Dubuque, Ia., who build the Farwell miller, inform us that this method of cutting wormwheels is employed in their shop on four sizes of wheels, two of which are cut with single-thread hob and two with double-thread hob.

The bronze blank is set on the revolving table which is turned at the proper speed to allow the hob to be fed into the blank without being first slashed with a single cutter. A

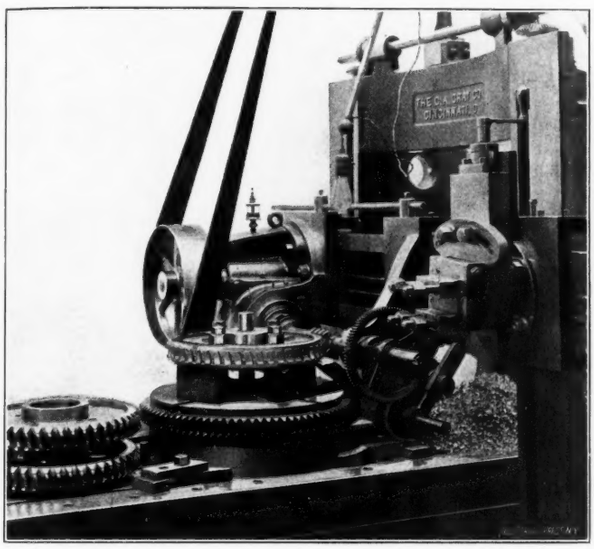

Milling Attachment Hobbing Worm Wheels.

worm which engages the teeth on the end of the table drives the table, and the correct speed of the table is secured by the use of gears of proper ratio between hob and worm. By changing the hob, blank and gears, a great variety of wormwheels may be cut.

This miller is designed for use in combination with a planer and is made in four sizes.

PARAGON TOOL HOLDER.

The advantages claimed for this tool-holder are that there is no setscrew to twist off, or to stand in the way when planing up close to a shoulder; the cuttings can curl off the cutter without packing between the end of the holder and the work; the cutter is solidly supported by the wedge-bolt nearly out to the point; the cutter can be instantly released, no

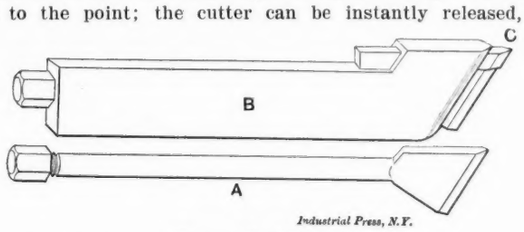

Industrial Press, N.Y.

Paragon Tool Holder.

matter if the cuttings and dust do pack around it; if the wedge-bolt strips it is a simple matter to weld on a new end; etc. The holder is made of steel and is oil-tempered, and is made extra long in the shank, a feature that is useful when a long reach is necessary. In the cut *A* is the wedge-bolt, *B* the holder and *C* the cutter. This tool is made by the Toronto Machine Co., Toronto, Ohio.

FORGED STEEL FLANGES.

The American Forged Steel Flange Co., 64 Wabash Avenue, Chicago, Ill., are manufacturing forged steel flanges for pipe work, suitable for riveting to pipe of any size from 3 inches to 14 inches diameter. The flanges are of sufficient thickness to withstand extremely high pressure when bolted together; while the hub, or portion that extends over the pipe is thin enough for punching, and when driven over the pipe both the flange and pipe can be punched at the same time, thus doing away with the labor of drilling. The flanges are forged from the best grade of soft steel and are practically indestructible.

* * *

FRESH FROM THE PRESS.

The Economical Burning of Coal without Smoke is the title of a small book by A. Bement, the well-known author of articles on gas engines and other subjects pertaining to furnace economy. The book is published by the Peabody Coal Co., Chicago, Ill., and its text deals to a considerable extent with the possibilities of smoke prevention when the washed coal is employed.

NEW YORK AIR BRAKE CATECHISM, by Robert H. Blackall, author of Air Brake Catechism (Westinghouse). 254 pages, 5 x 7¼ inches. Bound in cloth, and fully illustrated. Published by Norman W. Henley & Son, New York. Price, $1.25.

The public, interested in the airbrake, is so familiar with the author's excellent work on the Westinghouse apparatus, which has passed into the eighteenth edition, that it is not necessary to give this work an extended review. It is sufficient to state that the catechism of the New York Air Brake is given in the same general style and is illustrated with clear wax engravings showing sections of the different parts from which their functions may be readily understood in connection with the text. The book contains nearly 1,000 examination questions and answers on this brake and signaling apparatus and should be invaluable to trainmen and others having charge of the New York type.

THE DERRY COLLARD CO., 256 Broadway, New York, have prepared, and now have for sale, some new sketching paper for making drawings in isometric projection. This paper is ruled with faint green lines, for the guidance of the draftsman in making freehand sketches in isometric projection. This paper is put up in pads or is sold in single sheets, as desired. The pads have 40 sheets each and are made in sizes 6 x 9, price 25 cents, and 9 x 12, price 50 cents. The loose sheets are in sizes 12 x 18, price 5 cents each, or 40 for $1.00. This isometric paper will be appreciated by draftsmen as isometric projection is the only perspective where sketches are to be according to scale. The only difficulty in using the paper is in drawing circles. This seems puzzling at first, but becomes very simple when it is remembered that the isometric ellipse is in the ratio of 1 to 1.732, or nearly 1¾ when its short axes cross the short diameter of the diamond formed by the isometric lines.

NEW TRADE LITERATURE.

Manufacturers and others sending catalogues for notice are requested to address them to the Editor of MACHINERY, so that they can be kept separate from catalogues sent us for other purposes.

THE BUFFALO FORGE CO., Buffalo, N. Y. Illustrated booklet of the "Buffalo" disk wheels for ventilating purposes. These are driven by pulley, by steam or electricity.

THE AMERICAN BLOWER CO., Detroit, Mich. Catalogue No. 161 of the "A B C" disk ventilating fans for heating, ventilating and drying Different styles and sizes of these are shown and described.

THE SCOTT & SONS CO., Medford, Mass. Booklet illustrating the "Ess-Ess" turret lathes manufactured. This company also make the "Ess-Ess" collet chucks, automatic dies, automatic taps, etc.

THE NILES-BEMENT-POND CO., New York. "The Progress Reporter," a sheet illustrating by a number of large and handsome cuts some examples of the machines designed and constructed by the different companies representing this firm.

S. W. CARD MFG. CO., Mansfield, Mass. 1904 catalogue, pocket size, of machinists' tools. These include taps, dies, screw plates, etc., which are all illustrated here and prices given. Several useful tables also appear.

THE NATIONAL ELECTRIC CO., Milwaukee, Wis. Catalogue No. 61 of direct-current generators and motors, for lighting, power and railway service. These are built in capacities from 2 horse-power up to 1,500 kilowatts. The catalogue describes the various styles, and handsome illustrations accompany the text.

THE GARVIN MACHINE CO., New York. Complete illustrated catalogue of the Garvin products. This catalogue is pocket size, contains 210 pages, and shows their line of metal-working machine tools. They call attention to many new things. This book will be found useful and, owing to its size, very handy for reference.

THE BLAISDELL MACHINERY CO., Bradford, Pa. Bulletin 11, of the "Blaisdell" air compressors. This special bulletin describes their Classes AA and AD single air compressors, with illustrations of each type; the self-oiling compressors of their manufacture being shown in another bulletin.

THE F. E. REED CO., Worcester, Mass. Illustrated catalogue, 1904, of machine tools. Engine lathes of from 10 to 30 inches swing; special turning lathes; bench lathes; wood turning lathes; stud and bolt lathes; turret head chucking lathes; gun barrel turning lathes; forming lathes, etc., and several special machines are illustrated. Their patent friction countershaft is also shown.

THE MINNEAPOLIS STEEL & MACHINERY CO., Minneapolis, Minn. Catalogue illustrating the "Twin City" Corliss engines. The whole book is devoted to handsome cuts showing the different styles of these engines and their parts, also views of various plants where these engines are installed. The company also manufacture steam pumps, air compressors, condensers and a full line of transmission machinery.

THE BROWN & SHARPE MFG. CO., Providence, R. I. Booklet illustrating and describing a new line of calipers and dividers recently placed on the market and having round legs instead of the usual flat form. This adds materially to the stiffness of the tool without increasing its weight—a feature making it particularly acceptable to toolmakers and others having to do fine work. Three styles are made: Dividers, outside calipers and inside calipers in sizes 2, 3 and 4 inches.

THE GREAT LAKES ENGINEERING WORKS, Detroit, Mich. Catalogue D, 1904, describing the "Great Lakes" twin vertical air pump and condenser, built in sizes from 14 x 9 to 60 x 22 and furnished with or without condensers and with or without tank pumps. This company are also marine engine and steel ship builders, and manufacturers of hydraulic dredging machinery, air compressors for heavy duty, marine boilers, etc.

THE NEWTON MACHINE TOOL WORKS, Philadelphia, Pa. Catalogue No. 38, illustrating the "Newton" slotting machines. Several of these are new and all have been increased in weight to meet the requirements of high-speed steels. Slotting machines of from 6 to 50 inches stroke are shown, some of which are equipped either with motor drive or with change gear drive. Several sizes of portable slotting machines appear, also a 16-inch traveling head slotting machine, and an armor plate slotter.

THE LUCAS MACHINE TOOL CO., Cleveland, O. Two cleverly gotten up little circulars entitled "The Mathematical Cook" and "Jackass Power," calling attention to the Lucas boring, drilling and milling machine and the Lucas power forcing press respectively. A third circular describes the forcing press, which is designed to do *by power* a large variety of shop operations hitherto performed with sledge hammers and hand presses.

THE EUGENE DIETZGEN CO., 181 Monroe St., Chicago, Ill. 1904-5 catalogue and price list of drawing materials and surveying instruments. This book contains 411 pages, and in the preface the company state that they have made every effort to make this edition a truly representative one and they call particular attention to the new things listed, among which are their new line of "Richter" instruments of precision, also the surveying instruments of their own manufacture.

THE MUELLER MACHINE TOOL CO., Cincinnati, O. Illustrated booklet describing the radial drills manufactured. Three styles are shown: With 2½-foot arm, 3-foot arm and 4-foot arm, and drilling respectively to the center of a 5-foot, 6-foot and 8-foot circle. A universal center grinder is also shown and described. The catalogue will be mailed to any one wishing same. The agents for this company are: Niles-Bement-Pond, the Pratt & Whitney Co., Strong-Carlisle & Hammond Co., Chas. G. Smith Co., and Henshaw Bulkley & Co. (See advertisement.)

THE BICKFORD DRILL & TOOL CO., Cincinnati, O. Folder entitled "Bouquets," containing, as the title implies, bouquets in the form of testimonials sent to the Bickford Co. by their many patrons regarding the efficiency of the new Bickford radials. These letters are from prominent firms in the country, and in almost each instance a positive statement as to what is accomplished with the Bickford radial is made. Then follow two or three pages of names of reputable concerns who have recently installed one or more of the Bickford drills. Such arguments are certainly convincing.

MANUFACTURERS' NOTES.

THE JACOBSON MACHINE MFG. CO., Warren, Pa. Leaflet illustrating and describing the "Jacobson" gas and gasolene engine, built in sizes from 3 to 30 horse-power.

JOSEPH DIXON CRUCIBLE CO., Jersey City, N. J. Folder descriptive of the graphite dressing for wire ropes, for lubricating purposes. Also pamphlet telling of the good points of "Dixon's" pipe joint compound.

THE BILLINGS & SPENCER CO., Hartford, Conn. Circular of drop forged hammers for machinists' use. These are shown in three styles: The ball pene, the straight pene and the cross pene, and weigh from 4 ounces to 2 pounds.

PATTERSON, GOTTFRIED & HUNTER, Ltd., 146-150 Centre St., New York, have undertaken the sole distributing agency for the "Pioneer" pressed steel shaft hanger, for New York, New England and upper New Jersey.

THE AUBURN BALL BEARING CO., manufacturers of thrust and journal bearings of all sizes, have removed their main office and works from Auburn, N. Y., to 18 Commercial St., Rochester, N. Y., where they will have increased facilities for the manufacture of their products.

THE SUPERIOR CORUNDUM WHEEL CO., Waltham, Mass., inform us that M. F. Cunningham, for fifteen years with the Waltham Emery Wheel Co., has assumed the management of their company, and is making emery and corundum wheels and stones for all purposes.

THE F. BISSELL CO., Toledo, O. Bulletins Nos. 31, 36 and 37 and "Handbook of Switchboards." Bulletin No. 31 treats of tape, solder, screws, insulating materials and carbon brushes, etc.; No. 36, of batteries; No. 37, of house goods. The "Handbook" deals with switchboards of 2,500 amperes and less.

J. E. SNYDER, Worcester, Mass., manufacturer of upright drills, announces that he has taken his son, Milton C. Snyder, into partnership with him and that hereafter the business will be conducted under the name of J. E. Snyder & Son. Mr. Milton C. Snyder has been engaged in the business for several years.

THE MAGNETA CO., of Zurich, Switzerland, manufacturers of electric clocks without batteries or contacts for factories, office buildings, railroads, etc., have established a branch office in New York at No. 11 Broadway, for the introduction of their electric clock systems in this country. The office is in charge of W. Hommel, United States representative of the above company.

THE PERKINS MACHINE CO., formerly at South Boston, Mass., have removed their main office to the Warren plant at Warren, Mass., where all communications should be addressed. They announce that they have recently received large orders from their Berlin agents, Schuchardt & Schutte, and have shipped ten machines to different parts of Germany.

H. F. FREVERT for a number of years manager of the New York stores of the Niles-Bement-Pond Co. and Pratt & Whitney Co., has severed his connections with those companies and opened an office at 114-118 Liberty Street for the sale of machinery. Mr. Frevert is also manager of the New York office of the Norton Grinding Co., of Worcester, Mass., and the Brightman Mfg. Co., of Shelby, Ohio.

THE WATSON-STILLMAN CO., formerly at 202 E. 43d St., New York, removed on May 1st their offices and large stock of goods to 46 Dey St., and all their machinery to their new works at Aldene, Union County, N. J., at the juncture of the Lehigh Valley and Baltimore & Ohio R. R. and on the low grade connection between the Lehigh Valley and the Central Railroad of N. J., where they will have ample room to expand and handle such work as comes to them.

THE CARBORUNDUM CO., Niagara Falls, N. Y., recently shipped two freight cars with their products to St. Louis for an exhibit which will occupy Block No. 16 in Machinery Building. They state that this will be one of the most elaborate exhibits ever made by them, and one of the principal features will be a great pyramid of carborundum crystals, 7 feet high, and 6 feet in diameter at the base. The display will be in charge of William H. Arison and E. W. Taylor.

THE HARTFORD BLOWER CO., Hartford, Conn., have received a large order from Sargent & Co., New Haven, and one from the Scovill Mfg. Co., Waterbury, for Hartford mechanical dust collecting systems for their plants. The Hartford Co. make a specialty of installing the above-named systems, as well as heating, ventilating and drying systems, mechanical draft, dry kilns, blowers, exhaust fans, etc. Their new catalogue No. 57, entitled "Dust Collecting," will be mailed to anyone interested.

THE INTERNATIONAL CORRESPONDENCE SCHOOLS, Scranton, Pa., are represented at St. Louis by a handsome structure facing the Plaza in the Model Village. The lower floor of this building is devoted to a public exhibition of the plans and methods of the Schools, with specimens of the work of the students. The second floor will be used as a post office, reading and writing room and *rendezvous* for the Schools' students and their friends. Their book, "1,001 Stories of Success," will be mailed upon request.

THE RAMSEY & THORNLEY MACHINE CO., 51 Godwin St., Paterson, N. J., manufacturers of special light machines, announce that they are making a specialty of the following: Jigs and all kinds of special tools designed and built to facilitate manufacture. These they design from prints, sketches or samples of the piece to be manufactured. Also small gears; screw machine work; sheet metal dies; experimental work; and pattern making. Special attention is given to developing patents.

MANNING, MAXWELL & MOORE, New York, were recently awarded the entire contract for the tools and machinery for the railway shops of the Southern Pacific Co., including shops at 18 different points. This order consists of tools for machine shops, boiler shops, locomotive and car shops, and is, they think, the largest single machine tool order that has been placed in this country in many years. They have also secured contracts for the Shaw Electric Crane Co. for electric traveling cranes, and for the Hilles & Jones Co. for punching and shearing machinery, besides a large order from the Maine Central R. R. for boring mills, engine lathes, upright drills, shapers and grinding machinery.

THE Robertson Mfg. Co., Buffalo, N. Y., have recently brought out another size of the rapid cut power hacksaw. This is the No. 4 which has a capacity of 8x15 inches. This has been built to meet the demand of customers and others for a "larger machine on the same model." It is similar in design to their No. 3, being back-geared, but the vice is of new design, quick-acting and graduated in inches, and there is also a quick-acting clutch. No countershaft is required, and when the cut is complete the machine stops automatically. This machine is built especially for I-beam cutting, but can also be used for all kinds of cutting of iron or steel bars, in rounds or squares, and for many other purposes.

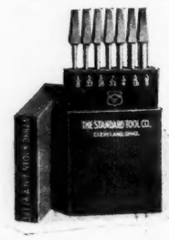

THE STANDARD TOOL COMPANY, Cleveland, Ohio, are offering their bit stock drills and wood brace drills, sets 14-A and 13-B, containing drills 1/16 to 5/16 in. by 32ds, in flat leatherette cases, as here illustrated. These cases are very convenient to carry in the pocket. The drills fit in holes drilled for each size, which is plainly marked on the box, in gold, beneath the corresponding drill. These compact little cases will also be very useful in the tool chest as they take up but little room, and the drills can always be found clean and ready for use. Where economy in preserving drills is a consideration, these handy sets will appeal as well worth the cost, which is but little over the price of the drills themselves.

SUMMARY OF NEW TOOLS, CATALOGUES, ETC.

IN THIS NUMBER.

MACHINERY describes in each number more new tools and appliances than any other mechanical paper, and a glance over this column will enable the reader to pick out what is of special interest to him.

DRAW-CUT TRAVERSE SHAPER: Cincinnati Milling Mche. Co., Cincinnati, O.
PIPE THREADING MACHINE: Stoever Fdry. & Mfg. Co., Myerstown, Pa } 562

BLUEPRINTING MACHINE: Keuffel & Esser Co., New York.....
SEMI-RADIAL DRILL: Bickford Drill & Tool Co., Cincinnati, Ohio ..... } 563

METAL-WORKING PRESS: Perkins Mche. Co., Warren, Mass....
PLATE-STRAIGHTENING ROLL: Bertsch & Co., Cambridge City, Ind.
PILLAR SHAPER: Stockbridge Mche. Co., Worcester, Mass.....
DRILLS: Special for turning sprockets and bevel gears: Baker Bros., Toledo, O. ..... } 564

HORIZONTAL DOUBLE-CRANK BENDING PRESS: E. W. Bliss Co., Brooklyn, N. Y. ..... } 565

ENGINE LATHE: Motor Driven: Crocker-Wheeler Co., Ampere, N. J.
MILLING MACHINE: with Long Arbor: Beaman & Smith Co., Providence, R. I. .....
COLD SAW: John T. Burr & Son, Brooklyn, N. Y..... } 566

SURFACE GRINDER: Special: Springfield Mfg. Co., Bridgeport, Conn.
SURFACE PLATE: Hazelton & Donald Mche. Co., Philadelphia, Pa. .....
BUFFING LATHE & GRINDER, Electrically driven: Bridgeport Safety Emery Wheel Co., Bridgeport, Conn..... } 567

FORGE, with pneumatically-driven fan: Ingersoll-Sergeant Drill Co., New York .....
BENCH LATHE, Screw-Cutting: Seneca Falls Mfg. Co., Seneca Falls, N. Y. ..... } 568

WORM HOBBING ATTACHMENT: Adams Co., Dubuque, Ia.....
TOOL HOLDER: Toronto Mche. Co., Toronto, O.....
FORGED STEEL FLANGES: American Forged Steel Flange Co., Chicago, Ill ..... } 569

CATALOGUES.

DISK WHEELS: for ventilating: Buffalo Forge Co., Buffalo, N. Y.
DISK VENTILATING FANS: American Blower Co., Detroit, Mich.
TURRET LATHES, and other products: Scott & Sons Co., Medford, Mass. .....
THE PROGRESS REPORTER: Niles-Bement-Pond Co., New York....
MACHINISTS' TOOLS: S. W. Card Mfg. Co., Mansfield, Mass....
DIRECT-CURRENT GENERATORS AND MOTORS: National Electric Co., Milwaukee, Wis. .....
METAL-WORKING MACHINE TOOLS: Garvin Mche. Co., New York.
AIR COMPRESSORS: Blaisdell Mchy. Co., Bradford, Pa.....
MACHINE TOOLS: F. E. Reed Co., Worcester, Mass..... } 569

CORLISS ENGINES "Twin City": Minneapolis Steel & Mchy. Co., Minneapolis, Minn. .....
CALIPERS AND DIVIDERS: Brown & Sharpe Mfg. Co., Providence, R. I. .....
AIR PUMPS AND CONDENSERS, "Great Lakes"; Great Lakes Engineering Works, Detroit, Mich.....
SLOTTING MACHINE: Newton Mche. Tool Works, Philadelphia, Pa.
BORING, MILLING AND DRILLING MACHINE: Lucas Mche. Tool Co., Cleveland, O. .....
POWER FORCING PRESS: Lucas Mche. Tool Co., Cleveland, O.....
DRAWING MATERIALS AND SURVEYING INSTRUMENTS: Eugene Dietzgen Co., Chicago, Ill.....
RADIAL DRILLS: Bickford Drill & Tool Co., Cincinnati, O.....
RADIAL DRILLS: Mueller Mche. Tool Co., Cincinnati, O..... } 570

COPYRIGHT, 1904, BY THE INDUSTRIAL PRESS.

From United States Navy Departm

PUNCH O

CREASE HERE.

PUNCH O

STANDARD BOILER RIVETS.

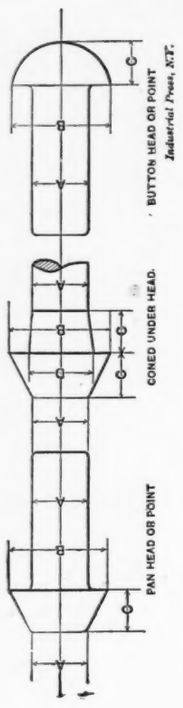

A	B	C	D	Weight of 1" of Shank.	Weight of Ten Heads. Pan.	Weight of Ten Heads. Button.
1/2"	7/8"	3/8"	9/16"	.056 lbs.	.41 lbs.	.40 lbs.
9/16"	15/16"	13/32"	5/8"	.070 "	.53 "	.50 "
5/8"	1 1/16"	7/16"	11/16"	.087 "	.71 "	.68 "
11/16"	1 1/8"	15/32"	3/4"	.105 "	.87 "	.82 "
3/4"	1 1/4"	1/2"	13/16"	.126 "	1.14 "	1.06 "
13/16"	1 5/16"	17/32"	7/8"	.147 "	1.36 "	1.20 "
7/8"	1 7/16"	9/16"	15/16"	.170 "	1.71 "	1.56 "
15/16"	1 1/2"	5/8"	1"	.195 "	2.11 "	1.94 "
1"	1 5/8"	11/16"	1 1/16"	.222 "	2.71 "	2.51 "
1 1/16"	1 11/16"	3/4"	1 1/8"	.251 "	3.23 "	3.02 "
1 1/8"	1 13/16"	25/32"	1 3/16"	.282 "	3.84 "	3.57 "
1 3/16"	1 7/8"	13/16"	1 9/32"	.314 "	4.32 "	3.99 "
1 1/4"	2"	7/8"	1 11/32"	.348 "	5.26 "	4.90 "
1 5/16"	2 1/16"	29/32"	1 13/32"	.383 "	5.86 "	5.43 "
1 3/8"	2 3/16"	15/16"	1 15/32"	.421 "	6.75 "	6.24 "
1 7/16"	2 1/4"	31/32"	1 17/32"	.460 "	7.45 "	6.83 "
1 1/2"	2 3/8"	1"	1 19/32"	.501 "	8.48 "	7.78 "
1 9/16"	2 7/16"	1 1/16"	1 21/32"	.543 "	9.57 "	8.75 "
1 5/8"	2 9/16"	1 3/32"	1 23/32"	.588 "	10.90 "	10.00 "

PUNCH O

CREASE HERE.

PUNCH O

LENGTH (UNDER HEAD) OF RIVETS.

EXAMPLE: A 1" pan head rivet is to be used to connect plates the sum of whose thickness is 1¾", or whose combined weight per square foot of area is 70 pounds. On the 1" rivet diameter line measure from the pan head line to the curve marked 1¾" or 70 pounds; the distance found—3¼"—is the length of rivet required to make a full head and fill up a hole in the plates 1/16" larger than the rivet body.

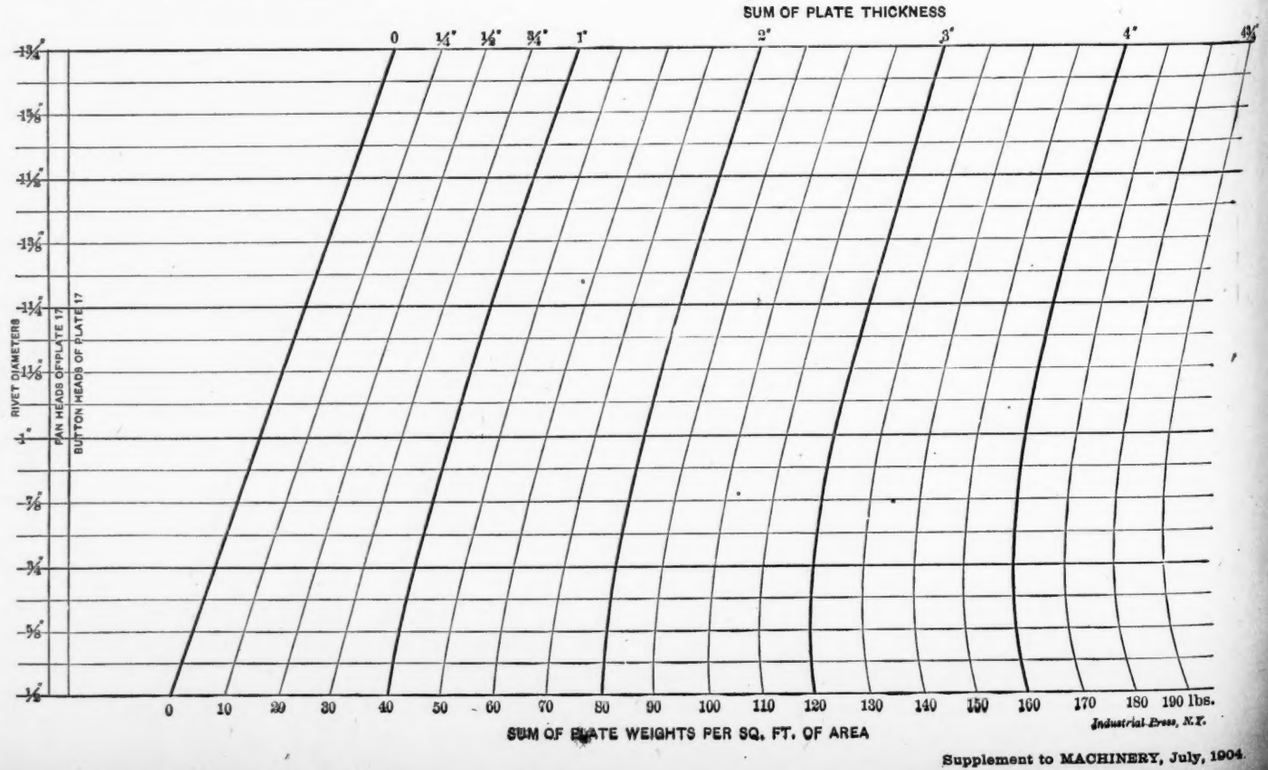

'S 6 x 9 DATA SHEETS.

ed States Army Department Standards.

These data sheets are intended to be cut into four sections, 6 x 9 inches in size, as indicated by the straight lines. They may then be bound into note-book form for convenient reference by means of staples inserted in holes punched at the points indicated. A suitable binder for these data sheets will be supplied for 25 cents. This binder has an open back and will hold an indefinite number of 6 x 9 sheets, depending on the length of staples used.

PUNCH

PUNCH

CREASE HERE.

STANDARD ROUND SLOTTED NUTS.

(Number of slots varies from four up)

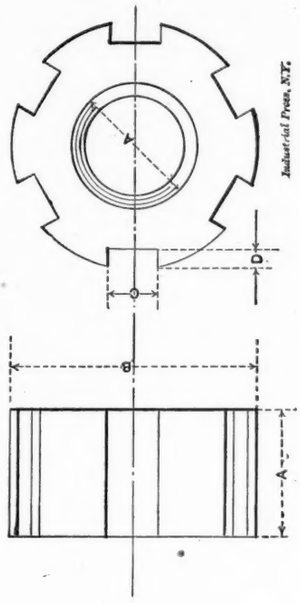

A	B	C	D	A	B	C	D
3/4"	1 1/2"	5/16"	1/4"	6"	10 1/2"	1 1/4"	1"
7/8"	1 3/4"	5/16"	1/4"	6 1/4"	10 5/8"	1 1/4"	1"
1"	2"	5/16"	1/4"	6 1/2"	11"	1 1/4"	1"
1 1/8"	2 1/8"	3/8"	5/16"	6 3/4"	11 1/8"	1 1/2"	1"
1 1/4"	2 3/8"	3/8"	5/16"	7"	11 7/8"	1 1/2"	1"
1 3/8"	2 5/8"	3/8"	5/16"	7 1/4"	12 1/4"	1 1/2"	1"
1 1/2"	2 3/4"	7/16"	5/16"	7 1/2"	12 5/8"	1 1/2"	1"
1 5/8"	3"	7/16"	5/16"	7 3/4"	13"	1 1/2"	1"
1 3/4"	3 1/8"	7/16"	5/16"	8"	13 1/8"	1 1/2"	1"
1 7/8"	3 3/8"	1/2"	3/8"	8 1/4"	13 3/4"	1 1/2"	1"
2"	3 5/8"	1/2"	3/8"	8 1/2"	14 1/8"	1 1/2"	1"
2 1/4"	4"	9/16"	3/8"	8 3/4"	14 1/2"	1 1/2"	1"
2 1/2"	4 1/4"	5/8"	7/16"	9"	15 1/8"	1 1/2"	1"
2 3/4"	4 5/8"	11/16"	7/16"	9 1/4"	15 1/2"	1 1/2"	1"
3"	5 1/8"	3/4"	1/2"	9 1/2"	15 7/8"	1 1/2"	1"
3 1/4"	5 5/8"	3/4"	1/2"	9 3/4"	16 1/4"	1 1/2"	1"
3 1/2"	6 1/8"	13/16"	1/2"	10"	16 5/8"	1 1/2"	1"
3 3/4"	6 1/2"	7/8"	9/16"	10 1/4"	17"	1 1/2"	1"
4"	6 7/8"	7/8"	9/16"	10 1/2"	17 1/8"	1 1/2"	1"
4 1/4"	7 3/8"	15/16"	5/8"	10 3/4"	18"	1 1/2"	1"
4 1/2"	7 3/4"	1"	5/8"	11"	18 3/8"	1 1/2"	1"
4 3/4"	8 1/8"	1"	5/8"	11 1/4"	18 3/4"	1 1/2"	1"
5"	8 5/8"	1 1/16"	11/16"	11 1/2"	19 1/4"	1 1/2"	1"
5 1/4"	9"	1 1/16"	11/16"	11 3/4"	19 5/8"	1 1/2"	1"
5 1/2"	9 3/8"	1 1/16"	11/16"	12"	20"	1 1/2"	1"
5 3/4"	9 3/4"	1 1/16"	11/16"	....	....	....	....

PUNCH

PUNCH

CREASE HERE.

INCHES TO DECIMALS OF A FOOT.

	0	1	2	3	4	5	6	7	8	9	10	11
..	....	0833	1667	2500	3333	4167	5000	5833	6667	7500	8333	9167
1/32	0026	0859	1693	2526	3359	4193	5026	5859	6693	7526	8359	9193
1/16	0052	0885	1719	2552	3385	4219	5052	5885	6719	7552	8385	9219
3/32	0078	0911	1745	2578	3411	4245	5078	5911	6745	7578	8411	9245
1/8	0104	0938	1771	2604	3438	4271	5104	5938	6771	7604	8438	9271
5/32	0130	0964	1797	2630	3464	4297	5130	5964	6797	7630	8464	9297
3/16	0156	0990	1823	2656	3490	4323	5156	5990	6823	7656	8490	9323
7/32	0182	1016	1849	2682	3516	4349	5182	6016	6849	7682	8516	9349
1/4	0208	1042	1875	2708	3542	4375	5208	6042	6875	7708	8542	9375
9/32	0234	1068	1901	2734	3568	4401	5234	6068	6901	7734	8568	9401
5/16	0260	1094	1927	2760	3594	4427	5260	6094	6927	7760	8594	9427
11/32	0286	1120	1953	2786	3620	4453	5286	6120	6953	7786	8620	9453
3/8	0313	1146	1979	2813	3646	4479	5313	6146	6979	7813	8646	9479
13/32	0339	1172	2005	2839	3672	4505	5339	6172	7005	7839	8672	9505
7/16	0365	1198	2031	2865	3698	4531	5365	6198	7031	7865	8698	9531
15/32	0391	1224	2057	2891	3724	4557	5391	6224	7057	7891	8724	9557
1/2	0417	1253	2083	2917	3750	4583	5417	6250	7083	7917	8750	9583
17/32	0443	1276	2109	2943	3776	4609	5443	6276	7109	7943	8776	9609
9/16	0409	1302	2135	2969	3802	4635	5469	6302	7135	7969	8802	9635
19/32	0495	1328	2161	2995	3828	4661	5495	6328	7161	7995	8828	9661
5/8	0521	1354	2188	3021	3854	4688	5521	6354	7188	8021	8854	9688
21/32	0547	1380	2214	3047	3880	4714	5547	6380	7214	8047	8880	9714
11/16	0573	1406	2240	3073	3906	4740	5573	6406	7240	8073	8906	9740
23/32	0599	1432	2266	3099	3932	4766	5599	6432	7266	8099	8932	9766
3/4	0625	1458	2292	3125	3958	4792	5625	6458	7292	8125	8958	9792
25/32	0651	1484	2318	3151	3984	4818	5651	6484	7318	8151	8984	9818
13/16	0677	1510	2344	3177	4010	4844	5677	6510	7344	8177	9010	9844
27/32	0703	1536	2370	3203	4036	4870	5703	6536	7370	8203	9036	9870
7/8	0729	1563	2396	3229	4063	4896	5729	6563	7396	8229	9063	9896
29/32	0755	1589	2422	3255	4089	4922	5755	6589	7422	8255	9089	9922
15/16	0781	1615	2448	3281	4115	4948	5781	6615	7448	8281	9115	9948
31/32	0807	1641	2474	3307	4141	4974	5807	6641	7474	8307	9141	9974